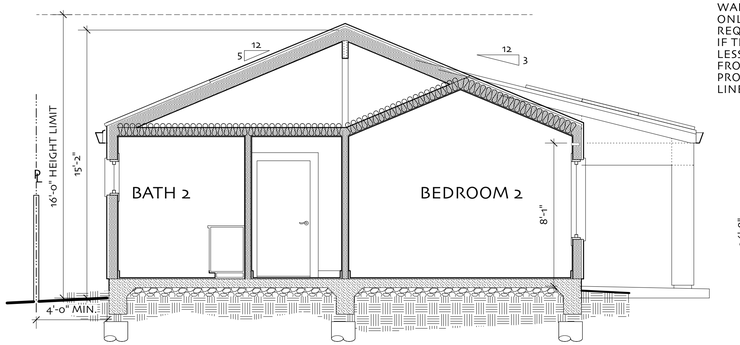

SECTION A

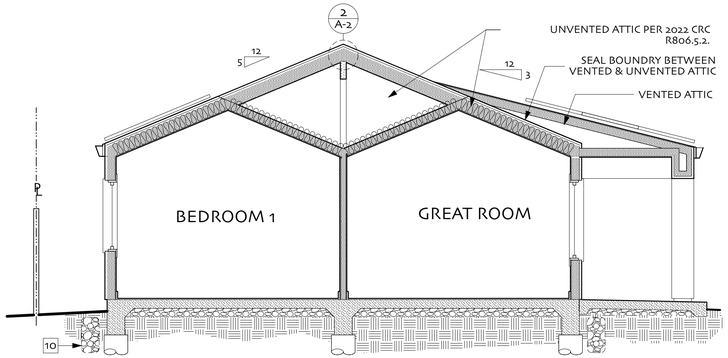

SECTION B

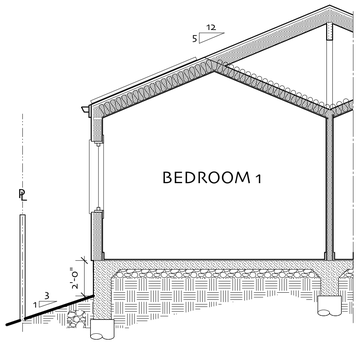

DOWNSLOPE SECTION B

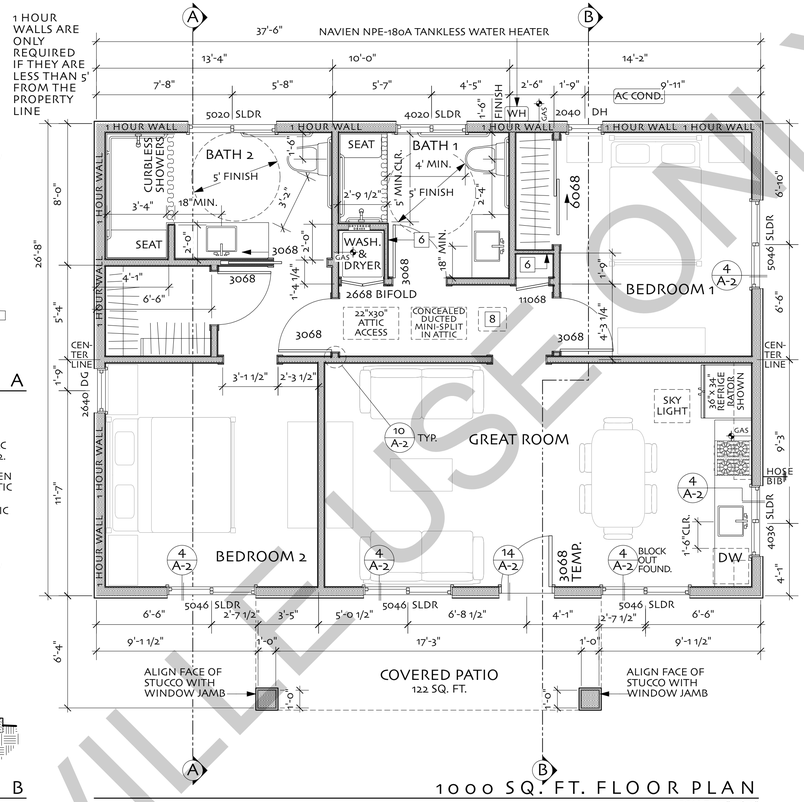

1000 SQ. FT. FLOOR PLAN

SCALE 1/4"=1'-0"

FLOOR PLAN NOTES

1. PROVIDE BLOCKING FOR 42 INCH MINIMUM LENGTH GRAB BAR PER CBC 11B-604.3.1

2. THE LAVATORY HEIGHT OF THE RIM OR COUNTER SURFACE SHALL NOT EXCEED 34 INCHES MAXIMUM HEIGHT PER CBC 11B-606.3.

3. BATHROOM SINKS SHALL BE A MINIMUM OF 18 INCHES TO THE SIDEWALL FROM THE CENTERLINE OF THE SINK.

4. STANDARD ROLLING TYPE SHOWER COMPARTMENT SHALL BE 30 INCH MINIMUM WIDTH BY 60 INCH MINIMUM CLEAR DEPTH WITH A FULL OPENING WITH ON THE LONG SIDE OF 60 INCHES MINIMUM PER CBC 11B-608.2.2.

5. MAXIMUM FLOOR SLOPE IN SHOWER STILL NOT EXCEED 1/2 INCH PER FOOT. 2 INCH MINIMUM DEPTH TO DRAIN INLET.

6. 2X6 FLAT STUDS @ 12" O.C. ALL OTHER INTERIOR STUDS ARE 2X4 AND EXTERIOR STUDS 2X6 UNLESS NOTED OTHERWISE.

7. INSULATE CEILINGS AND WALLS BETWEEN BEDROOMS AND GREAT ROOM WITH R-11 SOUND ATTENUATION BATTS.

8. PANASONIC FV-10VE1 ENERGY RECOVERY VENTILATOR SET TO 50 CFM

9. WEATHER STRIP & TEMPERED GLASS ON EXTERIOR DOOR.

10. CONTINUOS DRAIN SYSTEM ON 4 SIDES OF HOUSE; SDR-35 PVC PIPES WITH 1% MIN. SLOPE TO DRAIN. TOP PIPE IS SOLID 4"Ø FOR RAIN LEADERS. BOTTOM PIPE IS SEPARATE SYSTEM OF 4"Ø PIPIES WITH PERFORATIONS DOWN. PIPES IN 12" WIDE FILTER FABRIC WRAPPED TRENCH WITH CLASS II DRAIN ROCK FILL. 6" COMPACTED NATIVE SOIL OVER TRENCH. SLOPE SURFACE GRADE 5% MINIMUM AWAY FROM BUILDING.

SHEET INDEX

	ARCHITECTURAL
A-1	FLOOR PLANS & ELEVATIONS
A-2	ROOF, CEILING & ELECTRICAL PLANS & DETAILS
A-3	GENERAL NOTES
A-4	GREEN BUILDING CHECKLIST
	TITLE 24
EC	ENERGY CALCULATIONS
EC M	RESID. MANDATORY MEASURES
	STRUCTURAL
SN1	GENERAL NOTES
SN2	GENERAL SPECIFICATIONS
S1	ROOF FRAMING & FOUNDATION
SD1	SHEARWALL SCHEDULE
SD2	TYPICAL DETAILS
SD3	FOUNDATION DETAILS
SD4	ROOF RAMING DETAILS

CODE COMPLIANCE

OCCUPANCY GROUP: R3
TYPE OF CONSTRUCTION: VB
2022 CALIFORNIA RESIDENTIAL CODE
2022 CALIFORNIA MECHANICAL CODE
2022 CALIFORNIA PLUMBING CODE
2022 CALIFORNIA ELECTRICAL CODE
2022 CALIFORNIA ENERGY CODE
2022 CALIFORNIA BUILDING GREEN STANDARDS CODE
2022 CALIFORNIA BUILDING CODE (STRUCTURAL ONLY)
TYPE V CONSTRUCTION

THE FOLLOWING TO BE DEFERRED AND/OR REVIEWED AND APPROVED UNDER A SEPARATE PERMIT
A. FIRE SPRINKLERS (consult Danville if required per NFPA 13D)
B. GAS LINE SIZING CALCULATIONS
C. ELECTRICAL LOAD CALCULATIONS
D. PHOTOVOLTAIC SYSTEM

STRUCTURAL ENGINEER & TITLE 24

JUSTEN PEEK
ADVANCED ENGINEERING
3361 WALNUT BLVD. SUITE 100
BRENTWOOD CA 94513
(925) 516-3502
jp@advengineering.com

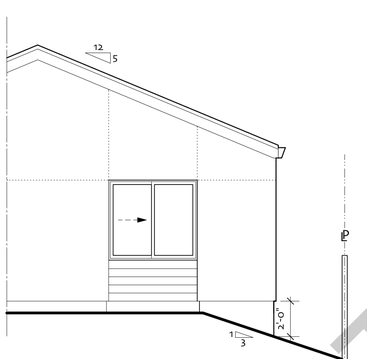

DOWNSLOPE SIDE

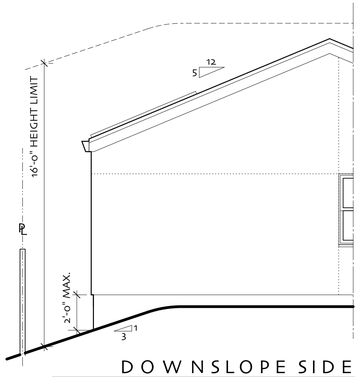

DOWNSLOPE SIDE

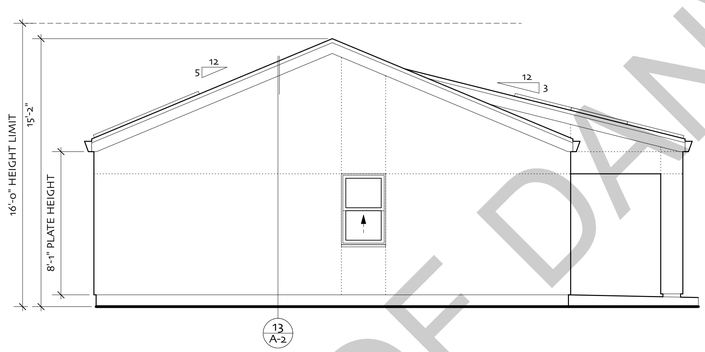

SIDE ELEVATION

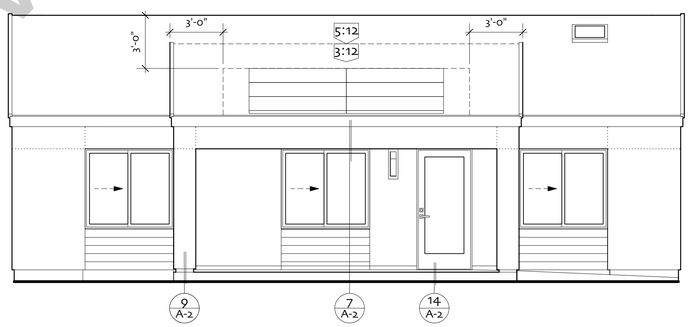

FRONT ELEVATION

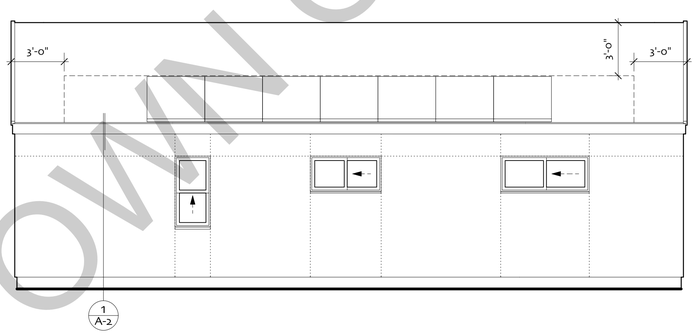

BACK ELEVATION

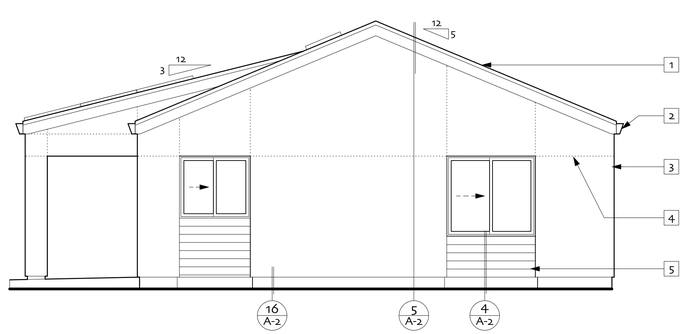

SIDE ELEVATION

ELEVATION NOTES

THESE ARE SUGGESTED EXTERIOR MATERIALS. CONSULT WITH TOWN OF DANVILLE TO DETERMINE WHICH MATERIALS WILL BE COMPATIBLE WITH THE MATERIALS AND COLORS OF THE PRIMARY RESIDENCE.

1. ASPHALT COMP ROOF AT 3:12 AND 5:12 (ENGINEERED FOR CONCRETE TILE IN CASE MAIN HOUSE HAS CONCRETE TILE ROOF).

2. 6" SOLDERED BONDERIZED GSM FASCIA GUTTERS WITH NO RIBBING AND WITH CONCEALED DOWNSPOUT 2" I.D. PVC DOWNSPOUTS.

3. 7/8" 3 COAT STUCCO WITH SMOOTH FINISH OVER EXPANDED METAL LATH OVER 2 LAYERS 30 LB. BUILDING PAPER OVER 1/2" CDX PLYWOOD.

4. DOUBLE V-GROOVE 26 GA. BONDERIZED STUCCO SCREED 1/2" BETWEEN POINTS.

5. ACCENT PANEL OF CEDAR RAIN SCREEN, LAP SIDING, PORCELAIN WOOD LOOK TILE, OR ANOTHER TILE SELECTED BY OWNER ON 2X4 STUD WALLS BELOW WINDOWS ONLY. SEE DETAIL 4/A-2 TO RECESS FOUNDATION 1 1/2" BY WIDTH OF WINDOW R.O. + 3"

FRANCIS GARCIA
ARCHITECT
925 984 9983
www.francisgarciaarchitect.com

1000 S.F. 2 BEDROOM A.D.U. FOR THE TOWN OF DANVLLE

Rev. No.	Revision

LICENSED ARCHITECT FRANCIS GARCIA CA 5000 REN. 12-31-23 STATE OF CALIFORNIA

Drawn: FG
Date: 3-24-2023
Scale: 1/4"=1'-0"

CONTEMPORARY LEFT PLAN DOWN SLOPE LOT WITH PIERS

A-1

FILE NAME
2-CO-LD-P 3-24-23

TOWN OF DANVILLE USE ONLY

PLAN CHECK RESPONSE NOTES

1. ALL PERMITS EXCEEDING $1,000.00 IN VALUATION SHALL REQUIRE INSTALLATION OF APPROVED SMOKE AND CARBON MONOXIDE DETECTORS WITHIN THE DWELLING.

2. ALL PERMITS EXCEEDING $10,000.00 IN VALUATION SHALL REQUIRE THE INSTALLATION OF AN APPROVED AUTOMATIC GAS SHUT-OFF DEVICE ON THE CUSTOMER OWNED PIPING AT THE UTILITY METER.

3. BUILDING ADDRESS NUMBERS MUST BE A MINIMUM OF 4 INCHES IN HEIGHT OR 3 INCHES IN HEIGHT AND SELF-ILLUMINATED.

4. PER THE GREEN BUILDING STANDARDS CODE, THE CONSTRUCTION AND DEMOLITION ORDINANCE (C&D) APPLIES.

5. BATHTUB AND SHOWER FLOORS AND WALLS ABOVE BATHTUBS WITH INSTALLED SHOWER HEADS AND IN SHOWER COMPARTMENTS SHALL BE FINISHED WITH A NONABSORBENT SURFACE. SUCH WALL SURFACES SHALL EXTEND TO A HEIGHT OF NOT LESS THAN 6 FEET ABOVE THE FLOOR. CRC R307.2

6. GYPSUM BOARD SHALL NOT BE USED WHERE THERE WILL BE DIRECT EXPOSURE TO WATER, OR IN AREAS SUBJECT TO CONTINUOUS HIGH HUMIDITY. CRC R702.3.7:

7. BATHROOMS EXHAUST SHALL TERMINATE 3'-0" FROM PROPERTY LINE AND 3'-0" FROM OPENINGS INTO THE BUILDING PER CMC 502

8. WALLS WITHIN 5 FEET OF THE PROPERTY LINE SHALL BE OF ONE-HOUR FIRE RATED FIRE RESISTIVE ASSEMBLY IN ACCORDANCE WITH CBC 721 TABLE 721.1(1)ITEM NUMBER 15-1.6; 2" X 6" FIRE-RETARDANT-TREATED WOOD STUDS 16" ON CENTER. INTERIOR FACE HAS TWO LAYERS OF 5/8" TYPE X GYPSUM WITH THE BASE LAYER PLACED VERTICALLY AND ATTACHED WITH 6D BOX NAILS 12" ON CENTER. THE FACE LAYER IS PLACED HORIZONTALLY AND ATTACHED WITH 8D BOX NAILS 8" ON CENTER AT JOINTS AND 12" ON CENTER ELSEWHERE. THE EXTERIOR FACE HAS A BASE LAYER OF 5/8" TYPE X GYPSUM SHEATHING PLACED VERTICALLY WITH 6D BOX NAILS 8" ON CENTER AT JOINTS AND 12" ON CENTER ELSEWHERE. AN APPROVED BUILDING PAPER IS NEXT APPLIED, FOLLOWED BY SELF-FURRED EXTERIOR LATH ATTACHED WITH 2 1/2", NO. 12 GAGE GALVANIZED ROOFING NAILS WITH A 3/8" DIAMETER HEAD AND SPACED 6" ON CENTER ALONG EACH STUD. CEMENT PLASTER CONSISTING OF A 1/2" BROWN COAT IS THEN APPLIED. THE SCRATCH COAT IS MIXED IN THE PROPORTION OF 1:3 BY WEIGHT, CEMENT TO SAND WITH 10 POUNDS OF HYDRATED LIME AND 3 POUNDS OF APPROVED ADDITIVES OR ADMIXTURES PER SACK OF CEMENT. THE BROWN COAT IS MIXED IN THE PROPORTION OF 1:4 BY WEIGHT, CEMENT TO SAND WITH THE SAME AMOUNTS OF HYDRATED LIME AND APPROVED ADDITIVES OR ADMIXTURES USED IN THE SCRATCH COAT.

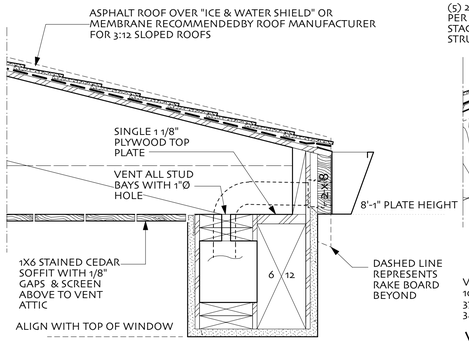

EAVE AT 3:12 PORCH ROOF
SCALE 1 1/2" = 1' -0" — 7

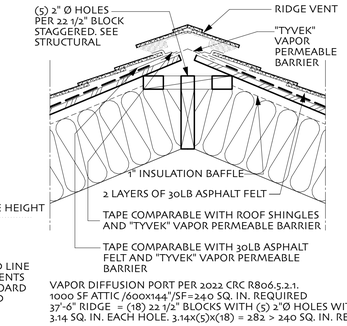

VAPOR DIFFUSION PORT PER 2022 CRC R806.5.2.1.
1000 SF ATTIC /600x144"/SF=240 SQ. IN. REQUIRED
37'-6" RIDGE = (18) 22 1/2" BLOCKS WITH (5) 2"Ø HOLES WITH 3.14 SQ. IN. EACH HOLE. 3.14X(5)X(18) = 282 > 240 SQ. IN. REQ.

VAPOR DIFFUSION PORT
SCALE 1 1/2" = 1' -0" — 2

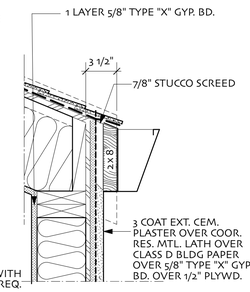

EAVE AT 1 HR. WALL
SCALE 1 1/2" = 1' -0" — 1

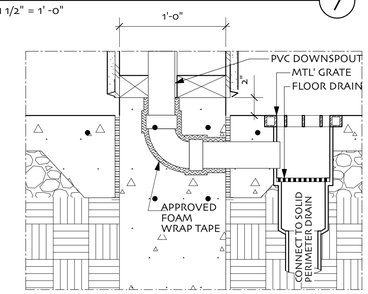

COLUMN BASE
SCALE 1 1/2" = 1' -0" — 9

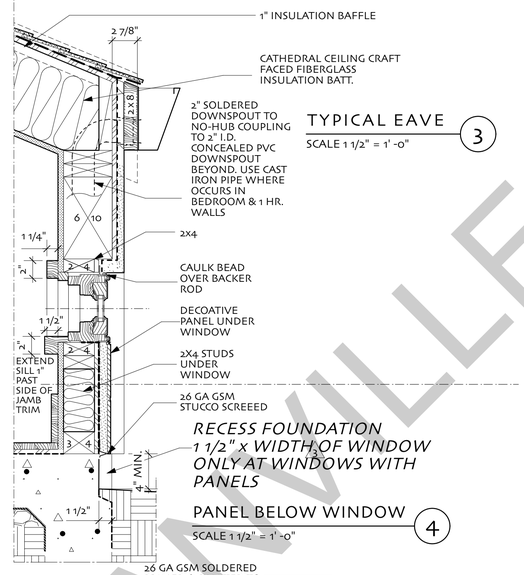

TYPICAL EAVE
SCALE 1 1/2" = 1' -0" — 3

PANEL BELOW WINDOW
SCALE 1 1/2" = 1' -0" — 4

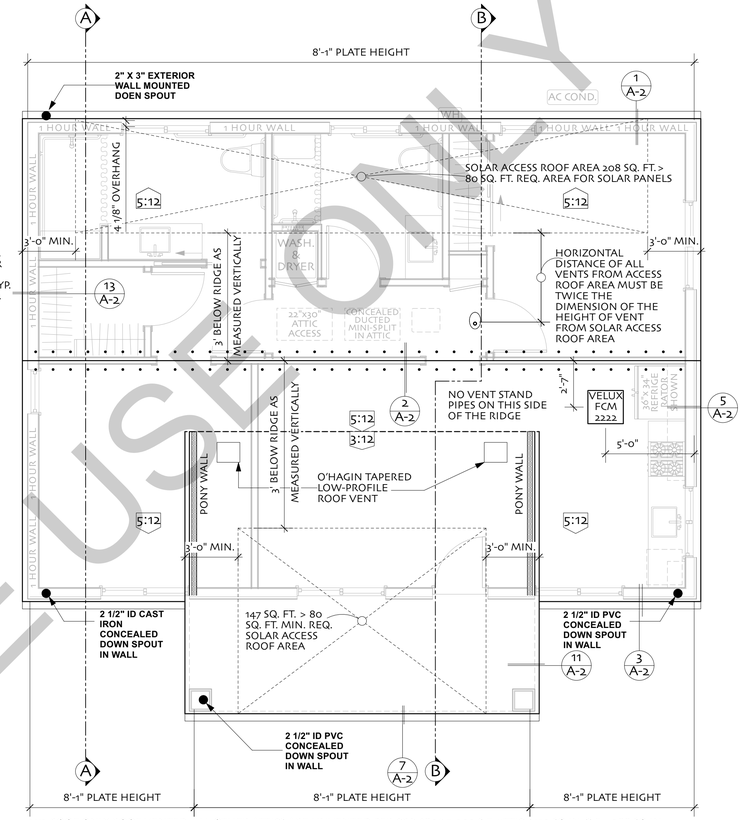

3:12 ROOF ONLY ROOF VENTED. ALL OTHER ATTICS ARE UNVENTED PER CRC R806.5. 300 S.F. ATTIC / 150 SQ.IN./S.F.= 288 SQ.IN. VENTING REQ. PORCH SOFFITS HAVE 1X6 BOARDS WITH 1/8" GAP BETWEEN THEM FOR VENTING PROVIDES 2.2% VENTING. 86 S.F. OF PORCH SOFFIT PROVIDES 272 SQ. IN.> 144 SQ. IN. REQ ON LOWER HALF OF ATTIC. (2) O'HAGIN TAPERED LOW-PROFILE ROOF VENTS PROVIDE 144 SQ. IN. =144 SQ. IN REQ.

ROOF PLAN
SCALE 1/4"=1'-0"

ELECTRICAL LEGEND

- STANDARD LIGHT SWITCH
- MANUAL ON/AUTO OFF OCCUPANCY SENSOR
- DIMMER SWITCH
- FUSED SWITCH
- SWITCH IN ATTIC
- JAMB SWITCH
- DOORBELL BUTTON
- THERMOSTAT
- SUBPANEL — ELECTRICAL SUB-PANEL
- RECESSED LED FIXTURE
- SURFACE-MOUNTED LED LIGHT
- WALL MOUNTED LIGHT FIXTURE
- LED PENDANT LIGHT FIXTURE
- EXTERIOR LED FIXTURE WITH MOTION SENSOR & PHOTOCELL
- FLUORESCENT LIGHT FIXTURE IN ATTIC
- SURFACE MOUNTED LED SPOT LIGHT
- GARBAGE DISPOSAL
- DUPLEX OUTLET
- WP — WEATHERPROOF GFI DUPLEX OUTLET
- DUPLEX OUTLET WITH W/ GFI
- 220 — STANDARD 220 VOLT OUTLET
- DUPLEX OUTLET IN ATTIC
- AFCI — ARCH FAULT CIRCUIT DUPLEX OUTLET
- SD — HARD-WIRED 120V SMOKE & CARBON MONOXIDE ALARM W/ BATTERY BACKUP
- EXHAUST FAN/LIGHT COMBO SWITCHED SEPARATELY.

NOTE; OUTLETS FOR APPLIANCES ARE NOT SHOWN ON PLAN. PLEASE REFER TO APPLIANCE INSTALLATION INSTRUCTIONS FOR APPLIANCES THAT REQUIRE OUTLETS.

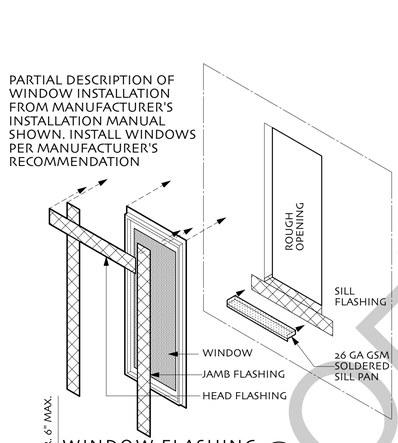

WINDOW FLASHING
NOT TO SCALE — 15

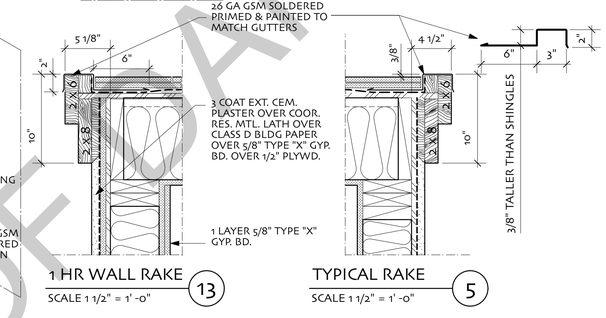

1 HR WALL RAKE
SCALE 1 1/2" = 1' -0" — 13

TYPICAL RAKE
SCALE 1 1/2" = 1' -0" — 5

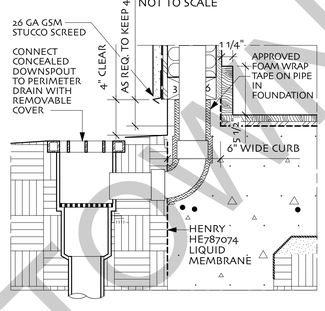

CURB AT WALL
SCALE 1 1/2" = 1' -0" — 16

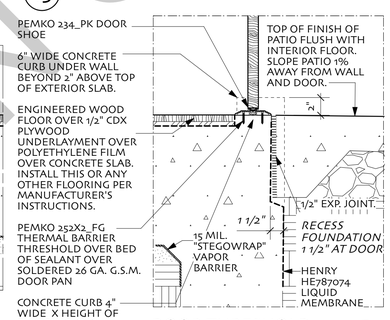

DOOR THRESHOLD
SCALE 1 1/2" = 1' -0" — 14

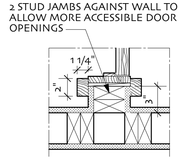

JAMB TRIM
SCALE 1 1/2" = 1' -0" — 6

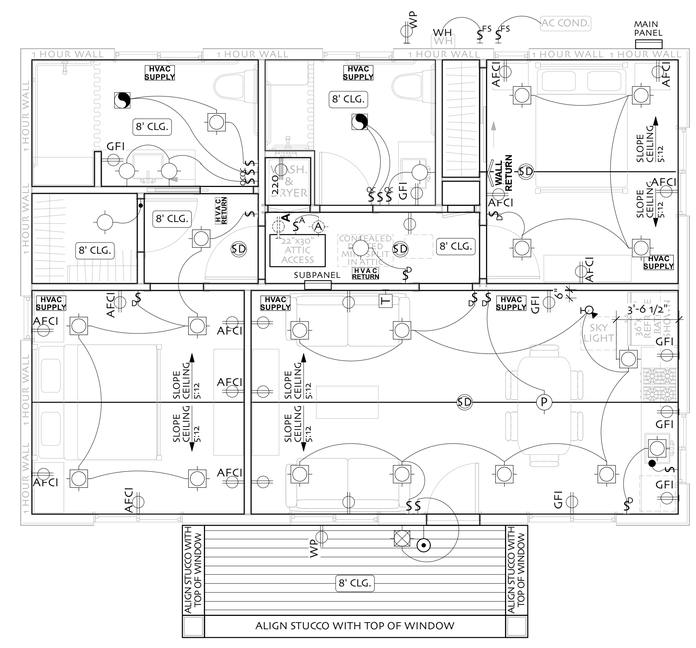

ELECTRICAL AND REFLECTED CEILING PLAN
SCALE 1/4"=1'-0"

FRANCIS GARCIA ARCHITECT
925 984 9983
www.francisgarciaarchitect.com

1000 S.F. 2 BEDROOM A.D.U. FOR THE TOWN OF DANVLLE

Rev. No.	Revision

Drawn: FG
Date: 3-24-2023
Scale: AS NOTED

LICENSED ARCHITECT — FRANCIS GARCIA — CA 2150 — REN. 12-31-25 — STATE OF CALIFORNIA

CONTEMPORARY LEFT PLAN DOWN SLOPE LOT ROOF & ELECTRICAL PLANS & DETAILS

A-2

TOWN OF DANVILLE USE ONLY

SPECIFICATIONS

SEE ALSO STRUCTURAL NOTES BY STRUCTURAL ENGINEER. WHERE CONFLICTS OCCUR STRUCTURAL ENGINEERS NOTES SHALL GOVERN.

CONCRETE & CONCRETE BLOCK

A. CONCRETE

1. Concrete shall be machine mixed with a maximum 7 1/2 gallons of water per sack of cement.

2. Mixing water shall be clean and free from injurious amounts of oil, acids, alkalies, organic materials or other deleterious substances.

3. Course aggregate shall be hard, durable crushed stone or gravel graded per ASTM C33.

4. Sand shall be clean, hard, durable, washed free from silt, loam, or clay.

5. Concrete shall conform to ASTM 94 and reach a minimum strength of 2500 P.S.I. in 28 days or as specified in the soils report.

6. Concrete quality shall conform to provisions of Sec. 1905 CBC

7. Cement shall conform to ASTM C150, Type I or II.

8. All concrete shall be thoroughly consolidated during placement, using a mechanical vibrator.

9. Except where detailed on structural drawings, reinforcement shall not be displaced or cut to provide clearance for penetrations, inserts, or embedments.

10. Removal of forms: supporting vertical surfaces min. 2 days: supporting horizontal surfaces min. 14 days.

11. Only one grade of concrete shall be permitted on the job site at one time.

B. CONCRETE BLOCK

1. All concrete blocks shall be grade N load bearing unit F =1500 #PSI (U.N.O.) conforming to A.S.T.M. C-90 (medium weight concrete blocks).

2. Mortar (type S mortar) mix shall be 1 part cement, 4-1/2 parts sand, and a maximum of part lime putty or dry hydrated lime.

3. Mortar joints shall be a minimum of 3/8 and shall be full head and bed.

4. Grout mix shall be 1 part cement, 3 parts sand, 2 parts pea gravel, and sufficient water to cause the grout to flow into all joints without segregation.

5. Grout pours shall not exceed 4 feet in height Grout cells as noted on plans, F c 2000 P.S.I. min.

6. When grouting is stopped for one hour or longer, horizontal construction joints shall be formed by stopping the pour of grout 1-1/2" below the top of the uppermost unit.

7. Vertical reinforcement shall be held in position at the top and bottom and at intervals not exceeding 192 bar diameters.

8. Dry pack shall be 1:2 stiff mix.

9. Concrete block retaining walls shall conform to provisions set forth in CBC Chapter 16 for structural masonry walls.

10. Provide an approved waterproofing on earth side of retaining wall with protection board before backfilling. Provide back of wall drain or weep holes as per detail.

11. Block units shall have a moistcure content not to exceed 30% at time of laying to prevent dehydration of mortar and grout, and shall be free of all substances which might impair the bond of the units to mortar and grout.

12. Proper units shall be used to provide for all windows, doors, bond beams, lintels, pilasters etc. with a minimum of cutting.

13. Lay masonry in running bond except as designated otherwise on drawings. Provide masonry bonds at all corners and intersections-

14. All grout shall be thoroughly consolidated and re--consolidated, using a mechanical masonry vibrator.

15. Masonry Fireplaces shall be constructed and reinforced per code, and according to the recommendations of the Masonry Institute of America. Chimneys shall have terra cotta flue linings. Install ash dump at each fireplace.

STEEL

A. STRUCTURAL STEEL AND MISCELLANEOUS METALS

1. Structural steel shapes and plates shall conform to ASTM A36 identified with mark and mill certification.

2. Steel pipe columns shall conform to ASTM A53 Type E or S Grade B. Note dimension on plans shows out side diameter.

3. Steel tube columns shall conform to ASTM A500, Grade B.

4. All welding shall conform to standard code and A.W.S. for arc and gas welding. Use the electric arc process F-70 electrodes: low hydrogen electrodes for welding bolts and rebar as per ASTM A233.

5. All welding shall be performed by certified welders in a shop approved by local ordinances.

6. Structural field welding shall have special inspection, in accordance with CBC 1704.

7. Fasteners: Bolts and nuts shall conform to ASTM A307. All bolt heads and nuts that bear on wood shall have malleable iron washers if exposed or cut washers if concealed. All anchor bolts shall be hook bolts (with 2 hook), see plan for spacing.

8. Exposed exterior steel shall be galvanized, UNO

9. Exposed interior steel shall be shop primed and field (final) coated.

B. REINFORCING STEEL

1. Reinforcing steel shall be deformed bars conforming to ASTM designation A615--40, intermediate grade.

2. Wire fabric shall be electrically welded steel, ASTM A185. Lap 6 at edges.

3. Detailing fabrication and placing of reinforcing steel shall conform to or equal that set forth in the Manual of Standard Practice for Detailing Reinforced Concrete Structures, and better where required by the drawings.

4. Standard hooks shall comply with recommended sizes as shown in above manual, unless otherwise noted.

5. Lap all bar splices, 36 diameters in concrete and 40 diameters in concrete block, or 24",whichever is greater, stagger splices: bars shall be continuous in length as long as possible.

6. Suitable devices shall be used to hold the reinforcing in its true horizontal and vertical positions. These devices shall be sufficiently rigid and numerous to prevent displacement of the reinforcing during the placing of the concrete.

7. All dowels, anchor bolts and other inserts shall be well secured in place prior to pouring concrete.

8. All pipes and ducts through concrete to be sleeved. Verify openings with plumber and electrician.

9. All welded wire fabric shall be tied at three places to each dowel except locations where slab is designed as a floating slab.

10. Clear distance of reinforcement shall be as follows:
a) Wall surface = 1"
b) Formed surface in contact w/earth = 2"
c) Unformed surface in contact w/earth = 3"
d) Clear distance between bars = 2"

WOOD

A. MATERIALS

1. All lumber shall be Douglas Fir, and shall be stamped with a grademark of the following grades by an approved grading agency UNO

A. Studs and plates- standard grade min.

B. Joists and rafter- #2 grade min. UNO

C. Beam and lintel - #1 grade min. UNO

D. Post: 4X post - #2 grade, U.N.O. (exposed #1)
6x post & larger - #1 grade

2. Glu-Laminated Timber Beams

A. Industrial appearance grade UNO

B. All members shall be composed of 1-1/2" laminations, Fbx-2400 PSI, dry use condition. Each member shall bear specific identification for location and shall be accompanied by a Certificate of Inspection by the inspection agency-Standard camber.

C. Prior to fabrication, shop drawings shall be prepared and submitted to the Architect for approval. Taper seats for level bearing.

D. Design, fabrication and construction of structural glu-lam members shall conform in all applicable respects to the following governing standards:

1. The American Institute of Timber Construction Standards, Manual #301.

2. The commercial standard for structural glued laminated timber, CS-253.

3. Standard specifications for structural glued laminated Douglas Fir timber of the WCLA1 Comb. F, DF.

4. WCLIB certificate of lumber grades.

5. Approved inspection certificate in gluing procedures to be submitted to the building department prior to erection.

6. Each piece to be imprinted with standard identification marks.

3. Structural plywood shall be graded per A.P.A. PSI-83, and shall be interior type sheathing C-D grade with exterior glue, UNO All horizontal plywood shall be laid with face grain perpendicular to joists and with staggered joints.

B. CONNECTIONS

1. Nailing: Minimum nailing requirements for standard connections unless specifically shown or noted otherwise.

Timber Nailing Schedule
Taken from CBC Table 2304.9.1

3. A. Plywood sheathing: (at floors) UNO
Use T&G plywood (PI 48/24, CDX) w/10d common nails.
Supported panel edges nailed @ 6" o.c. Intermediate nailed @ 12" o.c.
Glue plywood to floor joist.
Nail immediately after gluing.

B. Plywood sheathing: (at roof) UNO
Use plywood (CDX) w/8d common nails.
Supported panel edges nailed @ 6" o.c. Intermediate nailed @ 12" o.c.
Blocking not required UNO

4. For flush framing of joists, use Simpson std. U joist hanger or equal. Provide rafter ties 4' -0" o.c. immediately above ceiling joists where ceiling joists are not parallel to roof rafters.

5. All manufactured connection hardware shall be as designated on drawings and installed and full nailed in conformance to manufacturer's instructions and applicable lCBO approvals.

6. Install lag screws in drilled lead holes with a diameter equal to of the shank diameter (lag screws shall not be hammered in). Wax or soap lag screws. Provide washers under heads bearing on wood. Holes shall be properly aligned.

7. Bolt holes shall be drilled 1/16" larger than the bolt diameter. Provide washers under all bolt heads and nuts bearing on wood. Holes shall be properly aligned. In no case shall misalignment be allowed which prevents proper bearing or alignment of members. Oversized holes shall not be allowed. Nuts shall be tightened snug.

8. Nails to be common wire nails.

C. INSTALLATION

1. Cutting and Notching of Studs:

Studs in exterior walls and bearing partitions may be cut or notched to a depth not exceeding 25% of stud width. Cutting or notching of studs in non-bearing partitions shall not exceed 40% of the width.

2. A hole not greater in diameter than 40% of the stud width may be bored in any wood stud. Bored holes not greater than 60% of the width of the stud are permitted in non-bearing partitions. In no case shall the edge of the bored hole be nearer than 5/8" to the edge of the stud. Bored holes shall not be located at the same section of stud as a cut or notch.

3. All lumber in contact with concrete shall be pressure treated (Wolminized) Douglas Fir or construction grade Redwood.

4. All stud walls shown on Structural Drawings shall have 2 x 4 studs placed at 16" o.c. except where noted otherwise.

5. Top plates shall be doubled on all stud walls. UNO

6. Cripples under headers shall be continuous to sole plate.

7. Block all stud walls as required for sheathing.

8. Provide blocking 2x wide of equal depth of the members between all joists and rafters at their supports, unless members are nailed to a rim joist

9. Install all horizontal members with crown up.

10. All members in bearing shall be accurately cut and aligned so that full bearing is provided without the use of shims.

11. Bearing posts shall have full blocking or support under.

12. Double joist under all parallel non-bearing partitions. Use 2-16d nails at i6" o.c. to nail double joist together unless noted otherwise.

13. All joists shall have a minimum of 2" bearing at supports. Lapping joists shall have 6" laps centered over interior supports.

14. Provide 2X solid blocking on joists and rafters @ 8'-0" o.c. and at supports.

15. Sills and Plates:
Sills and plates at shear walls shall be continuous and free of cuts and notches. Perforations shall be allowed with a maximum of 1 3/4" diameter and shall be located as close to the center as possible. Sill plates shall be pressure treated Douglas Fir. Sill bolts shall have 7" minimum embedment and be 12" maximum from ends of sills and corners. Provide metal washers under all bolt heads and nuts bearing on wood. All bolts through wood to be drive fit. At least 2 bolts shall be provided for each board.

16. Double joists around all openings

17. Non-Bearing Stud Wall Requirements:
Maximum Height
Up to 12' 2 x 4 @ 16" o.c
Up to 18' 2 X 6 @ 16" o.c
Up to 20' 2 x8 @ 16" o.c.
Lintels as Follows: (U.N.O.)
Roof Lintel Floor Lintel
Opening=8'-0" Use 4 x 8 Opening=8'-0" Use 4x10
Opening =6'-0" Use 4 x 6 Opening=6'-0" Use 4x8
Opening=4'-0" Use 4 x 4 Opening=4'-0" Use 4x6

18. Provide double trimmers at all openings 6'-0" wide or greater UNO

19. Fire stops are required at the following locations:

A. In concealed spaces of stud walls and partitions, including furred spaces, at the ceiling and floor levels and at 10 foot intervals along the length of the wall.

B. At all interconnections between concealed vertical and horizontal spaces such as occur at soffits, drop ceilings and cove ceilings.

C. In concealed spaces between stair stringers at the top and bottom of the run and between studs along and incline with the run of stairs if the walls under the stairs are unfinished.

D. In openings around vents, pipes, ducts, chimneys, fireplaces and similar openings that afford a passage for fire at ceiling and floor levels, with non-combustible materials.

E. Gas vents and non-combustible piping, in walls, passing through three floors or less shall be effectively draft stopped at each floor or ceiling.

20. Lap 4-0" minimum at top plate splice, with 8-16d nails at each side of splice U.N.O. Splices in upper and lower plates shall be staggered at least 10 feet.

21. All wood posts shall be 4X width of beam (UNO) 4 X 10 and larger beams/headers shall have post caps at ends, where indicated on plan.

22. Plywood at shear walls to be continuous at wall and door jamb intersections.

23. Provide boundary nailing to end posts at each shear wall.

24. Structural members shall not be cut for pipe, ducts, sleeves, etc., unless specifically noted or detailed.

25. Provide 3/8" min. particle board (underlayment under vinyl floors).

THERMAL AND MOISTURE PROTECTION

A. INSULATION

1. Minimum insulation to be as follows:
Roof and ceiling - Refer to
Exterior walls - Title 24
Floors wood - Notes
Sound Attenuation- See notes on Floor Plan

2. Cold Walls:
Portion of building between living space and an unheated garage, storage room and portion of wall above ceiling of an adjacent section of a split-level dwelling to be insulated same as roof, walls, or floor of dwelling.

3. It may be necessary to increase the depth of framing members to accommodate thicker insulation materials than that shown on drawings. Verify with Architect.

4. Install ceiling insulation as required to allow air circulation at eave vents.

5 Studs must be constructed, installed, and insulated as per Chapter 6, CMC

6. All insulation must meet California Energy Commission quality standards and be certified by the manufacturer

7. Provide water heater insulation blanket (R-12 or greater) or combined interior/exterior insulation (R-16 or greater): first 5 feet of pipes closest to tank insulated (R-3 or greater).

8. Insulate recirculating hot water piping in unheated spaces.

9. Insulation installer shall post in a conspicuous location in the building a certificate signed by the installer and builder stating that the installation conforms with the requirements of Title 24, chapter 2-53 and that the materials installed conform with the requirements of Title 20, Chapter 2, Subchapter 4, Article 3.

10. All insulation materials shall have a flame spread rating not to exceed 25 and a smoke density not to exceed 450.

11. U.N.O., leave 1" dead air space between the insulation and roof sheathing for venting.

B. GYPSUM WALLBOARD

1. Gypsum board work and materials shall meet all requirements of ANSI N0.97-l, for the Application and Finishing of Wallboard. Joint compound system mixed, applied, and finished in compliance with manufacturers printed directions, to be invisible after finished, including all metal corner beads and trim.

2. Gypsum wallboard on stud walls: (Nailed Application): Cooler nails at 7" o.c. all studs, plates, and blocking, use 5d nails with wallboard and 6d nails with 5/8" wallboard unless otherwise noted on drawings. Avoid breaking face paper.

Gypsum wallboard on stud walls: (Screwed Application):
USG (or equal) Type W screws spaced 16" o.c. max. for walls, 12" o.c. max. for ceilings.

3. Use 1/2" gypsum wallboard where stud spacing is 16" o.c. and 5/8" where stud spacing is greater than 16"o.c.

4. Use 5/8" type "x" gypsum board on all garage ceilings, walls and beams, and on all framing supporting stairs. Framing shall be at 16"oc max. Provide perimeter blocking between the ceiling joists for solid backing for the attachment of the sheetrock to the ceiling.

5. Use "Durorock" or equal backing board where tile is to be applied to walls UNO. All tub/shower walls shall have a smooth, hard, nonabsorbent surface over a moisture resistant underlayment to a height of 72 inches above the drain inlet (min). CBC R 307.2 (min).

C. LATH AND PLASTER

1. Stucco lath shall be key mesh bond lath self furred paper backed lath stapled to all studs, top and bottom plates, and blocking with 16 gauge staples 6" o.c.

2. All horizontal or sloping surfaces to receive exterior finishes shall have one layer of (min) 30# felt underlayment.

3. Plaster soffits to be over expanded metal lath.

4. Exterior cement plaster shall consist of three coats over paper backed metal lath.

5. Provide exterior plaster weep screed at grade beam/sill plate line.

D. TILE

1. Provide materials obtained from only one source for each type of tile and color to minimize variations in appearance and quality.

2. All tile installed over wood studs or solid wood backing: Studs shall be protected from moisture by 15# felt or 4 mil. polyethylene film. Metal lath shall be nailed at 4" o.c. vertical and 16" o.c. horizontal. Tile to be installed over 3 part mortar bed: scratch coat, floating coat, and bond coat. All work shall be done in accordance with the Ceramic Tile Institute's most current handbook and A.N.S.I. A108.1.

3. Grout joints for marble and granite tile shall be held as tight as possible and shall be uniform in width.

4. Grout joints for ceramic tile shall be as per manufacturer's recommendations and shall be uniform in width.

5. Where tile meets another flooring material (i.e., carpet, wood), concealed stripping as required shall be used to form the tightest possible joining. Door thresholds shall be correctly located and centered under the closed door line. Exposed screws or nails are not acceptable.

E. CAULKING AND SEALANTS

1. Apply in strict accordance with manufacturer's printed instructions.

2. Seal all joints around openings to provide a watertight and airtight seal. Clean joints thoroughly. Areas adjacent to joints shall be masked if necessary to obtain a neat sealer line, free of stains on adjacent surfaces. Joints shall be filled with back-up material as required by manufacturer.

3. All locations indicated on drawings and wherever air, water, or dust may infiltrate between construction members and as directed by builder shall be caulked. Set exterior edges or all exterior thresholds in sealant to provide weather tight seal.

4. Caulk and/or seal all exposed exterior and interior joints above and below grade and all those exterior and interior joints and appendages concealed by other building materials, flashing, etc.. Caulking and/or sealant material at exposed areas shall be in color as near as possible to match abutting natural or painted finishes.

5. Caulking and sealant compounds indicated on drawings and corresponding to the following list shall be Standard Dry Wall products, Inc., or as otherwise approved and complying with the applicable Federal Specifications. Neoprene Sealing Tapes and Strips shall be as manufactured by Dupont, Elastomer Chemicals Department.

GLAZING

1. Glass in doors or within 18" of floor within 24" of door,
and immediately adjacent to tubs & showers to be fully tempered float glass. Leave labels attached until final inspection.

2. All skylights within building to be double-glazed. All glass in skylights shall be fully tempered, safety glass, or wire glass. Approved plastics may be used. Skylights to comply with Chapter 24 of the California Building Code.

3. All egress or rescue windows from sleeping rooms shall have a minimum net clear opening of 5.7 square feet. Minimum net opening height shall be 24", minimum net width 20" with finished sill height not more than 44" above the floor.

SHEET METAL

1. Provide galvanized sheet metal (G.S.M.) side wall flashing at full perimeter of chimneys. G.S.M. saddle at high side.

2. Provide G.S.M. sheet metal flashing at any roof valley: edge of flashing shall be minimum 7" from center of valley.

3. Provide G.S.M. flashing for all vents or pipes penetrating roofs or roof decks.

4. Provide G.S.M. flashing at all roof-to-wall intersections.

5. Provide G.S.M. gutters continuous at full perimeter of roof. Provide exposed G.S.M. downspouts as noted on roof plan and building elevations. See gutter details for profile.

6. Provide all additional G.S.M. flashing as shown on construction documents or as may be otherwise required.

7. All flashing is to be 26 gauge galvanized sheet steel unless noted otherwise: meeting requirements of ASTM A525, mill prepared to receive paint finish, fabricated and installed in accordance with latest edition SMACNA requirements.

MECHANICAL AND PLUMBING

1. The plumbing and HVAC mechanical systems shall be designed by the Mechanical Subcontractor or his representative based upon energy calculations provided. The Mechanical Subcontractor shall size and specify equipment, provide duct layout and sizing.

2. Water meter, water line pipe and gas line pipe sizing calculations along with one line isometric drawings may be required to be provided if the building inspector requests these items.

3. Plumbing drain waste and vent and/or mechanical ducting along with electrical panel/wiring sizing calculations may be required to be provided by contractor if the field inspector requests these items. See deferred submittals

4. Installation instructions for all listed equipment shall be provided to the field inspector, time of inspection.

5. The Mechanical Subcontractor shall verify location of all registers and return air grills with Architect prior to commencing the work.

6. Setback thermostats are to be used on all heating systems.

7. Gas-fired space heating equipment to have intermittent ignition devices.

8. Attic Furnace Shall Be Set On Vibration Isolation Mounts. Provide a level working platform not less than 30" in depth in front of firebox side. If the furnace temperature-limit control, air filter, fuel-control valve, vent collar or air-handling unit is not serviceable from firebox side of furnace, a continuous floor not less than 24" in width shall be provided from platform in front of the firebox side of the furnace to in front of this equipment.

9. All air ducts penetrating separation wall or ceiling between garage and living area shall be 26 gauge minimum w/ R-6 insulation

10. All fixed appliances are to be securely fastened into place per UMC Section 304.4.

11. Sinks and water closets to have flexible pipe to water supply. Water closets shall have maximum 1.28 gpf + WaterSense. Lavatory, and sink faucets shall have a maximum flow rate of 1.2 gpm @ 60psi; minimum 0.8 gpm @ 20psi. Kitchen faucets shall have a flow rate of 1.8 gpm @ 60psi. May temporarily increase to 2.2gpm @60psi, but must default to 1.8 gpm. Shower heads shall have a maximum flow rate of 2.0 gpm @80psi +WaterSense per California Energy Commission.

12. All shower doors and sliding glass tub doors shall be 3/16" minimum fully tempered clear glass. Glass enclosure doors and panels must be labeled Category II. Swing door outward. Net area of shower receptor shall be not less than 7.1 square feet of floor area and encompass a 30" diameter circle.

13. Under floor Clean-outs shall be within 20 feet of the crawl space access, per Sect 707.1 All Clean-outs shall be water tight and air tight per Sect. 707.3

14. Pressure test is required for all gas lines prior to final inspection. (Minimum 1-1/2 times proposed maximum working pressure for half an hour. Maximum range for the pressure gage shall not exceed five times the test pressure per Sect. 1214.3.1

15. Provide 15" min. between the center of plumbing fixtures such as water closets and sinks and the nearest wall or object, per Sect. 407.6

16. Provide approved Excess Gas Shut-Off Valve (motion sensitive to be triggered when the gas flow exceeds the design flow limit) at each connection of a gas appliance to a gas line per C.C.Co. Ordinance 2004-27.

17. Provide approved Excess Gas Shut-Off Device (non-motion sensitive such as earthquake and to be triggered after 300,000 BTU flow) at the downstream meter per C.C.Co. Ordinance 2000-11.

14. Provide water supply at each refrigerator .

15. Drain pipes from upper level to be cast iron and wrapped in insulation for sound dampening. All plumbing shall be separated from structure with plumbing pipe isolators.

16. At water heater provide temperature and pressure relief valve with drain to exterior 6" to 24" to grade with pipe end pointed down.

17. Provide washer & dryer space with recessed water supply, fuel gas connection. 4" dia., 14 foot max. smooth metal dryer vent to outside air.

18. Termination of all environmental air ducts shall be a minimum of three feet from property lines or any openings into the building.

19. Provide min. 60 sq in. of screened louvered monoxide vents per car 12" from floor

20. Attic furnace shall be set on vibration isolation mounts on 3/4" plywood platform with 30"min space of platform w/ a minimum 24" wide access walk within 20 ft. of access portal of at least 30" x 30" at unit for service.

21. All gas fired mechanical appliances shall be provided with seismic anchorage. Vent cooktop to outside air. provide fuel gas and electrical components as required.

22. Verify locations of FAU and exterior condenser units.

23. Prefabricated metal fireplace unit. U. Listed or ICBO unit to have tight fitting glass doors and outside air supply. Install per CBC chapter with manufacturers flue and cap. provide spark arrestors for fireplace chimney. Verify surround and mantel materials and layout with owner.

24. Provide underfloor access with insulated door 18" x 24".

25. Flush and raised hearths shall be minimum 20" deep and 12" beyond each side of fireplace opening. Verify finish material with owner.

26. Tubs and showers shall have tempered glass enclosures and door U.N.O

27. All shower heads shall have 1.8 gpm maximum rate; lavatory faucets 1.2 gpm maximum rate and kitchen sink faucets shall have 1.8 gpm maximum rate. Toilets shall be 1.28 gallons per flush.

ELECTRICAL

A. GENERAL

1. Electrical Plan is a suggested layout. Consult with Owner for specialty electrical features such as central vacuum system, intercom, security system, cable televisions outlets, phone outlets, special lighting, etc., prior to construction.

2. The Electrical Contractor is responsible to perform all electrical wiring and installations to meet all applicable state and local code requirements, industry standards, and utility company requirements.

3. Electrical contractor is responsible to supply lateral service to building and to provide power to all mechanical systems and appliances as required per manufacturer's specifications.

4. For services exceeding 200 amps, submit a SCI letter from PG&E indicating the short-circuit current available at the service supply terminals (NEC 230--65). Provide at least 36" x 30" work space from finish grade to 6'-6" above finish grade.

5. Electrical system shall have a concrete enclosed electrode (UFER) electrical ground per (NEC 250-81).

6. Over and under gas and electric meters are not allowed.

7. Provide branch circuits as per NEC Article 220-3.

8. All electrical equipment shall be listed by an approved testing lab (NEC 110-3(a)).

9. All electrical fixtures are to be installed according to manufacturer's specifications.

10. Smoke and carbon monoxide detectors shall be 110v with battery backup and interconnected, which are audible in all sleeping areas will be provided at the following locations:
a. All bedrooms
b. In hallways and immediately adjacent to bedrooms
c. above tops of stairs
d. at least at every level
e. one additional where ceiling line elevation change> 2 feet .

11. All circuits are to be labeled and properly indentified ant the sub-panel.

B. WIRING

1. Provide G.F.I. for all outlets installed in bathrooms, garages, outdoors, and areas where water may be present.

2. Locate common wall junction boxes servicing two spaces in separate stud bays.

3. Conductors shall be annealed copper, insulated, sized as required, installed in rigid metallic conduit (RSC) or metallic tub (EMT) as required. Aluminum conductors will not be permitted.

4. 240v outlets require metal boxes. Provide metal or one hr. rated boxes at walls and ceilings between the garage and house.

5. Outlet boxes for ceiling fans shall be listed specifically for that use (NEC 370-17).

6. 2 small appliance branch circuits are required for the kitchen and are limited to supplying wall and counter space outlets for the kitchen, pantry, breakfast room, dining room, or similar areas. These circuits cannot serve outside plugs, range hood, disposals, dishwashers or microwaves — only the required countertop/wall outlets including the refrigerator. CEC 210.11(c)(1) and 210.52 (a) and 210.52(c).
a. In addition, a dedicated 20-amp circuit is required to serve the required bathroom outlets. this circuit cannot supply any other receptacles, lights, fans, etc. (exception-where the circuit supplies a single bathroom, outlets for other equipment within the same bathroom shall be permitted to be supplied.) CEC 210.52 (c)(3) and exception: cec210.23(a)(1) and (a)(2).
b. A dedicated 20-amp branch circuit shall be provided to supply the laundry receptacle outlet. CEC 210.11(c)(2) and 210.52(f). & a 30 amp circuit for electric clothes dryer.

7. Provide a grounding system as per nec article 250-81 c, min 20 of #4awg bare copper wire in the footing or grade beam, 2" from the bottom. Also provide electric grounding, ("bond") of metal piping to service equipment, cold water and gas pipe.

8. Provide main and sub-panel amperages prior to first inspection.

C. LIGHTING

1. Recessed lighting fixtures in insulated ceilings shall be listed for zero clearance insulation cover.

2. Exterior lights shall be labeled "suitable for wet locations", unless under a porch roof where they can be labeled "suitable for damp locations" (NEC 410-4).

3. Kitchens: At least 50% of the total wattage of kitchen lighting must be from high efficacy luminaries. Non high efficacy luminaires must be switched separately from high efficacy luminaires. (150(K)2)

4. Bathrooms, utility rooms, garages and laundry rooms: High efficacy lighting or manual-on occupancy sensors required. (150(K)3)

5. Exterior attached to building: High efficacy luminaires or combined photosensor/ occupancy sensor required. (150(K)6)

6. All other interior spaces: High efficacy luminaires, occupancy sensor, OR dimmers required. Luminaires that are not high efficacy luminaires can be allowed in closets less than 70 square feet. (150(K) 4)

7. Recessed lighting: When installed in insulated ceilings, must be both Type IC (insulated covered) and rated airtight. (150 (K)5)

CAL GREEN MANDATORY MEASURES

Enhanced Durability and reduced Maintenance (4.406)
Joints and openings.
Annular spaces around pipes, electric cables, conduits, or other openings in plates at exterior walls shall be protected against the passage of rodents by closing such openings with cement mortar, concrete masonry or similar method acceptable to the enforcing agency.

Construction Waste Reduction, Disposal and Recycling (4.408)
A minimum of 50% of the construction waste generated at the site is diverted to recycle or salvage. This is achieved either by using City pre-certified landfills or implementation of a waste management plan. Waste management plan shall be pre-approved by Building and Safety Services Division.

Building Maintenance and Operation (4.410)
An operation and maintenance manual shall be provided to the building occupant or owner.

ENVIRONMENTAL QUALITY - Pollutant Control (4.504)
Duct openings and other related air distribution component openings shall be covered during construction.

Adhesives, sealants and caulks shall be compliant with VOC and other toxic compound limits.

Paints, stains and other coatings shall be compliant with VOC limits.

Aerosol paints and coatings shall be compliant with product weighted MIR limits for ROC and other toxic compounds.

Carpet and carpet systems shall be compliant with VOC limits.

Documentation shall be provided to the City building inspector verifying that compliant VOC limit finish materials have been used.

Particleboard, medium density fiberboard (MDF), and hardwood plywood used in interior finish systems shall comply with low formaldehyde emission standards.

Interior Moisture Control (4.505)
Building materials with visible signs of water damage shall not be installed. Wall and floor framing shall not be enclosed when the framing members exceed 19 percent moisture content. Moisture content shall be verified in compliance with the following:
1. Moisture content shall be determined with either a probe-type or contact-type moisture meter.
2. Moisture readings shall be taken at a point 2 feet (610 mm) to 4 feet (1219 mm) from the grade stamped end of each piece to be verified.
3. At least three random moisture readings shall be per- formed on wall and floor framing with documentation acceptable to the enforcing agency provided at the time of approval to enclose the wall and floor framing. Insulation products which are visibly wet or have a high moisture content shall be replaced or allowed to dry prior to enclosure in wall or floor cavities. Wet-applied insulation products shall follow the manufacturers' drying recommendations prior to enclosure.

Environmental Comfort (4.507)
Duct systems are sized, designed, and equipment is selected using the following methods:
1. Establish heat loss and heat gain values according to Air Conditioning Contractors of America (ACCA) Manual J or equivalent.
2. Size duct systems according to ACCA 29-D (Manual D) or equivalent.
3. Select heating and cooling equipment according to ACCA 36-S (Manual S) or equivalent.

Bathroom fan shall be ENERGY STAR compliant and ducted to outside of building and shall be controlled by a humidistat capable of adjustment between a relative humidity range of 50 to 80 percent.

Qualifications (702)
HVAC system installers are trained and certified in the proper installation of HVAC systems.
Verifications (703)
Verification of compliance with this code may include construction documents, plans specifications builder or installer certification, inspection reports, or other methods acceptable to the enforcing agency which show substantial conformance.

FRANCIS GARCIA
ARCHITECT
925 984 9983
www.francisgarciaarchitect.com

1000 S.F. 2 BEDROOM A.D.U. FOR THE TOWN OF DANVLLE

Rev. No.	Revision

LICENSED ARCHITECT FRANCIS GARCIA COMM REN. 31-12-25 STATE OF CALIFORNIA

Drawn: FG
Date: 3-24-2023
Scale:

GENERAL NOTES

A-3

TOWN OF DANVILLE USE ONLY

Reference	Part of Plan Set Sheet #	Reference	Description	Comments	City Use Only Field Insp. Verification
Residential Energy	EC	CALGreen Mandatory	CALGreen 4.201.1 Energy Efficiency	Compliance with Energy Code in effect is mandatory. Sheets CF-1R and MF-1R are required to be on the plans set.	Initials: Date:
Storm Water Drainage	Not applicable	City Municipal Code	Municipal Code Chapter 9.14 Storm water Management and Discharge Control	The site shall be the minimum requirements for drainage per the City municipal code as outlined by the State Water Board	Initials: Date:
Grading and Paving	Not applicable	CALGreen Mandatory	CALGreen 4.106.3 Grading and paving	Construction plans shall indicate how the site grading or drainage system will manage all surface water flows to keep water from entering buildings. Exception for additions and alterations which do not alter the existing drainage path.	Initials: Date:
EV Charging for new construction	Not applicable	CALGreen Mandatory	CALGreen 4.106.4 Electric vehicle (EV) charging for new construction	▪ Comply with Section 4.106.4.1 and 4.106.4.2 for future installation and use of EV chargers. ▪ Electric vehicle supply equipment (EVSE) shall be installed in accordance with the California Electrical Code, Article 625. ▪ Exceptions on a case by case basis as determined by the Local Enforcing Agency. – Where there is no commercial power supply. ▪ Verification that meeting requirements will alter the local utility infrastructure design requirements on the utility side of the meter increasing costs to the homeowner/ developer by more than $400.00 per dwelling unit.	Initials: Date:
EV Charging 1 & 2 family dwelling	Not applicable	CALGreen Mandatory	CALGreen 4.106.4.1 & 4.106.4.1.1 EV charging; one- and two-family dwellings/ townhouses with attached private garages	▪ Install a listed raceway to accommodate a dedicated 208/240-volt branch circuit for each dwelling unit. ▪ Raceway shall not be less than trade size 1 (nominal 1-inch inside diameter). ▪ Raceway shall originate at the main service or subpanel and terminate into a listed cabinet, box or other enclosure in close proximity to the proposed location of an EV charger.	
	Not applicable			▪ Raceways are required to be continuous at enclosed, inaccessible or concealed areas and spaces. ▪ Service panel and/or subpanel shall provide capacity to install a 40-ampere minimum dedicated branch circuit and spaces(s) reserved to permit installation of a branch circuit overcurrent protective device.	
Single EV space required	Not applicable	CALGreen Mandatory	CALGreen 4.106.4.2.3 Single EV space required	▪ Install listed raceway capable of accommodating a 208/240-volt dedicated branch circuit. ▪ The raceway shall not be less than trade size 1 (nominal 1-inch inside diameter). ▪ The raceway shall originate at the main service or subpanel and shall terminate into a listed cabinet, box or enclosure in close proximity to the proposed location of the EV space. ▪ Construction documents shall identify the raceway termination point. ▪ The service panel and/or subpanel shall provide capacity to install a 40-ampere minimum dedicated branch circuit and spaces(s) reserved to permit installation of a branch circuit overcurrent protective device.	
Reference	**Part of Plan Set Sheet #**	**Reference**	**Description**	**Comments**	**Commissioning**
Indoor Water Use	A-3	CALGreen Mandatory	CALGreen 4.03.1 Plumbing fixtures Water closets Shower heads – single multi heads Faucets	▪ 4.303.1.1 Water closets: The effective flush volume of all water closets shall not exceed 1.28 gallons per flush. Tank -type water closets shall be certified to the performance criteria of the U.S. EPA Water Sense Specification for Tank-type Toilets. ▪ 4.303.1.3.1 Single Showerhead: Showerheads shall have a maximum flow rate of not more than 2.0 gallons per minute at 80 psi. Showerheads shall be certified to the performance criteria of the U.S. EPA Water Sense Specification for Showerheads. ▪ 4.303.1.3.2 Multiple showerheads serving one shower. When a shower is served by more than one showerhead, the combined flow rate of all showerheads and/or other shower outlets controlled by a single valve shall not exceed 2.0 gallons per minute at 80 psi, or the shower shall be designed to allow only one shower outlet to be in operation at a time. ▪ 4.303.1.4.1 Residential lavatory faucets: The maximum flow rate of residential lavatory faucets shall not exceed 1.2 gallons per minute at 60 psi. The minimum flow rate of residential lavatory faucets shall not be less than 0.8 gallons per minute at 20 psi. ▪ 4.303.1.4.2 Lavatory faucets in common and public use areas. The maximum flow rate of lavatory faucets installed in common and public use areas (outside of dwellings or sleeping units) in residential buildings shall not exceed 0.5 gallons per minute at 60 psi. ▪ 4.303.1.4.3 Metering faucets. Metering faucets when installed in residential buildings shall not deliver more than 0.25 gallons per cycle. ▪ 4.303.1.4.4 Kitchen faucets. The maximum flow rate of kitchen faucets shall not exceed 1.8 gallons per minute at 60 psi. Kitchen faucets may temporarily increase the flow above the maximum rate, but not to exceed 2.2 gallons per minute at 60 psi, and must default to a maximum flow rate of 1.8 gallons per minute at 60 psi.	Initials: Date:
	A-3				
Standards for plumbing	A-3	CALGreen Mandatory	CALGreen 4.303.2 Standards for plumbing fixtures and fittings	Plumbing fixtures and fittings shall be installed in accordance with the California Plumbing Code, and shall meet the applicable standards referenced in Table 1701.1 of the California Plumbing Code.	Initials: Date:
Outdoor water use	Not applicable	CALGreen Mandatory	CALGreen 4.304.1 Outdoor potable water use in landscape areas.	After December 1, 2014, new residential developments with an aggregate landscape area equal to or greater than 500 square feet shall comply with one of the following options: 1. A local water efficient landscape ordinance of the current California Department of Water Resources' Model Water Efficient Landscape Ordinance (MWELO), whichever is more stringent, or 2. Projects with aggregate landscape areas less than 2,400 square feet may comply with the MWELO's Appendix D Prescriptive Compliance Option.	Initials: Date:
Rodent Protection	A-4	CALGreen Mandatory	CALGreen 4.406.1 Enhanced Durability and Reduced Maintenance	Rodent proofing. Annular spaces around pipes, electrical cables, conduit or other openings in sole/bottom plates at exterior walls shall be protected against the passage of rodents by closing such openings with cement mortar, concrete masonry or a similar method acceptable to the enforcing agency.	Initials: Date:
Construction waste management	A-4	City Municipal Code	Municipal Code Green Building Code section 20.26.050 and Construction and demolition Debris Section 9.21	Construction waste reduction, disposal and recycling: Each applicant for a regulated project shall comply with the diversion requirements of this section. Compliance with this section shall be a condition of approval for any building or demolition permit issued for a regulated project. Diversion requirement means the recycling or reuse of at least 90 percent of Portland cement concrete and asphalt concrete and at least 75 percent of the remaining construction and demolition debris, or the percentage established by the compliance official for a project pursuant to an exemption, of the total construction and demolition debris.	
Construction water management plan	A-4	CALGreen Mandatory	CALGreen 4.408.2 Construction waste management plan	Submit a construction waste management plan in conformance with Items 1 through 5. The construction waste management plan shall be updated as necessary and shall be available during construction for examination by the enforcing agency. 1. Identify the construction and demolition waste material to be diverted from disposal by recycling, reuse on the project or salvage for future use or sale. 2. Specify if construction and demolition waste materials will be sorted on-site (source-separated) or bulk mixed (single system). 3. Identify diversion facilities where the construction and demolition waste material will be taken. 4. Identify construction methods employed to reduce the amount of construction and demolition waste generated. 5. Specify that the amount of construction and demolition waste materials diverted shall be calculated by weight or volume, but not by both.	
Waste Management Company	A-4	CALGreen Mandatory	CALGreen 4.408.3 Waste Management company	Utilize a waste management company, approved by the enforcing agency, which can provide verifiable documentation that the percentage of construction and demolition waste material diverted from the landfill complies with Section 4.408.1.	
Waste stream reduction	A-4	CALGreen Mandatory	CALGreen 4.408.4 & 4.408.4.1 Waste stream reduction alternative (LR)	4.408.4: Projects that generate a total combined weight of construction and demolition waste disposed of in landfills, which do not exceed 3.4 pounds of the building area shall meet the minimum 65 percent construction waste reduction requirement in Section 4.408.1 4.408.4.1: Projects that generate a total combined weight of construction and demolition waste disposed of in landfills, which do not exceed 2 pounds per square foot of the building area, shall meet the minimum 65-percent construction waste reduction requirement in Section 4.408.1	
Waste Document-ation	A-4	CALGreen Mandatory	CALGreen 4.408.5 Documentation	Documentation shall be provided to the enforcing agency which demonstrates compliance with Section 4.408.2, Items 1 through 5, Section 4.408.3 or Section 4.408.4.	
Building Maintenance	A-4	CALGreen Mandatory	CALGreen 4.410.1 Building Maintenance & Operation	This mandatory feature requires a maintenance manual be provided at the final inspection of the project. The manual shall include 10 points concerning the operation and maintenance of the dwelling.	
Fire Places	Not applicable	CALGreen Mandatory	CALGreen 4.503.1 the installation of factory built fireplaces or stoves	Any installed gas fireplace shall be direct-vent sealed-combustion type. Any installed woodstoves or pellet stoves shall comply with U.S. EPA New Source Performance Standards (NSPS) emission limits as applicable, and shall have a permanent label indicating they are certified to meet the emission limits. Woodstoves, pellet stoves and fireplaces shall also comply with applicable local ordinances.	
Pollutant Control	A-4	CALGreen Mandatory	CALGreen 4.504.1 Covering of duct opening during construction	At the time of rough installation, during storage on the construction site and until final startup of the heating, cooling and ventilating equipment, all duct and other related air distribution component openings shall be covered with tape, plastic, sheet metal or other methods acceptable to the enforcing agency to reduce the amount of water, dust and debris, which may enter the system.	

Reference	Part of Plan Set Sheet #	Reference	Description	Comments	City Use Only Field Insp. Verification
Finishes: Adhesives, sealants and caulks	A-4	CALGreen Mandatory	CALGreen 4.504.2.1 Adhesives, sealants and caulks	Adhesives, sealants and caulks used on the project shall meet the requirements of the following standards unless more stringent local or regional air pollution or air quality management district rules apply: 1. Adhesives, adhesive bonding primers, adhesive primers, sealants, sealant primers, and caulks shall comply with local or regional air pollution control or air quality management district rules where applicable, or SCAQMD Rule 1168 VOC limits, as shown in Tables 4.504.1 or 4.504.2, as applicable. Such products shall also comply with Rule 1168 prohibition on the use of certain toxic compounds (chloroform, ethylene dichloride, methylene chloride, perchloroethylene and trichloroentylene), except for aerosol products as specified in Subsection 2 below. 2. Aerosol adhesives, and smaller unit sizes of adhesives, and sealant or caulking compounds (in units of product, less packaging, which do not weigh more than 1 pound and do not consist of more than 16 fluid ounces) shall comply with statewide VOC standards and other requirements, including prohibitions on use of certain toxic compounds, of the California Code of Regulations (CCR), Title 17, commencing with Section 94507.	Initials: Date:
Finishes: Paints and coatings	A-4	CALGreen Mandatory	CALGreen 4.504.2.2 Paints and Coatings	Architectural paints and coatings shall comply with VOC limits in Table 1 of the Air Resources Board Architectural Suggested Control Measure, as shown in Table 4.504.3, unless more stringent local limits apply. The VOC content limit for coatings that do not meet the definitions for the specialty coatings categories listed in Table 4.504.3 shall be determined by classifying the coating as Flat, Nonflat, or Nonflat-High Gloss coating, based on its gloss, as defined in subsections 4.21, 4.36, and 4.37, of the 2007 California Air Resources Board, Suggested Control Measure, and the corresponding Flat, Nonflat, or Nonflat-High Gloss VOC limit in Table 4.504.3 shall apply.	Initials: Date:
Finishes: Aerosol paints & coatings	A-4	CALGreen Mandatory	CALGreen 4.504.2.3 Aerosol paints and coatings	Aerosol paints and coatings shall meet the Product-Weighted MIR Limits for ROC in Section 94522(a)(2) and other requirements, including prohibitions on use of certain toxic compounds and ozone depleting substances, in Section 94522(e)(1) and (f)(1) of the CCR, Title 17, commencing with Section 94520; and in areas under the jurisdiction of the Bay Area Air Quality Management District shall additionally comply with the percent VOC by weight of product limits of Regulation 8, Rule 49.	Initials: Date:
Carpeting systems	A-4	CALGreen Mandatory	CALGreen 4.504.3 Carpeting systems	All carpet installed in the building interior shall meet the testing and product requirements of one of the following: 1. Carpet and Rug Institute's Green Label Plus Program. 2. California Department of Public Health, "Standard Method for the Testing and Evaluation of Volatile Organic Chemical Emissions from Indoor Sources Using Environmental Chambers," Version 1.1, February 2010 (also known as Specification 01350.) 3. NSF/ANSI 140 at the Gold level. 4. Scientific certifications System Indoor Advantate™ Gold	Initials: Date:
Carpet Cushion	A-4	CALGreen Mandatory	CALGreen 4.504.3.1 Carpeting cushion	All carpet cushion installed in the building interior shall meet the requirements of the Carpet and Rug Institute's Green Label Plus Program.	
Carpet Adhesive	A-4	CALGreen Mandatory	CALGreen 4.504.3.2 Carpeting adhesive	All carpet adhesive shall meet the requirements of Table 4.504.1.	
Resilient Flooring Systems	A-4	CALGreen Mandatory	CALGreen 4.504.4 Resilient flooring systems	Where resilient flooring is installed, at least 80% of floor area receiving resilient flooring shall comply with one or more of the following: 1. Products compliant with the California Department of Public Health, "Standard Method for the Testing and Evaluation of Volatile Organic Chemical Emissions from Indoor Sources Using Environmental Chambers," Version 1.1, February 2010 (also known as Specification 01350), certified as a CHPS Low-Emitting Material in the Collaborative for High Performance Schools (CHPS) High Performance Products Database 2. Products certified under UL GREENGUARD Gold (formerly the Greenguard Children & Schools Program) 3. Certification under the Resilient Floor Covering Institute (RFCI) FloorScore program 4. Meet the California Department of Public Health, "Standard Method for the Testing and Evaluation of Volatile Organic Chemical Emissions from Indoor Sources Using Environmental Chambers," Version 1.1, February 2010 (also known as Specification 01350)	
Composite Wood Products	A-4	CALGreen Mandatory	CALGreen 4.504.4 Composite wood products	Hardwood plywood, particleboard and medium density fiberboard composite wood products used on the interior or exterior of the building shall meet the requirements for formaldehyde as specified in the Air Resources Board's Air Toxics Control Measure for Composite Wood (17 CCR 93120 et. seq.), as shown in Table 4.504.5. Documentation is required per Section 4.504.5.1. Definition of Composite Wood Products: Composite wood products include hardwood plywood, particle board, and medium density fiberboard. "Composite wood products" do not include hardboard, structural plywood, structural panels, structural composite lumber, oriented strand board, glued laminated timber, prefabricated wood I-joists, or finger-jointed lumber, all as specified in CCR, Title 17, Section 93120.1(a).	
Documenta-tion	A-4	CALGreen Mandatory	CALGreen 4.504.5.1 Documentation	Verification of compliance with this section shall be provided as requested by the enforcing agency. Documentation shall include at least one of the following: 1. Product certifications and specifications. 2. Chain of custody certifications. 3. Product labeled and invoiced as meeting the Composite Wood Products regulation (see CCR, Title 17, Section 93120, *et seq.*). 4. Exterior grade products marked as meeting the PS-1 or PS-2 standards of the Engineered Wood Association, the Australian *AS/NZS 2269*, Exposure 636 3S and Canadian CSA 0121, CSA 0151, CSA 0153 and CSA 0325 standards. 5. Other methods acceptable to the enforcing	Initials: Date:
Interior Moisture Control	A-4	CALGreen Mandatory	CALGreen 4.505.2 Interior Moisture Control	Vapor retarder and capillary break is installed at slab-on grade foundations	Initials: Date:
Moisture Content of Building Materials	A-4	CALGreen Mandatory	CALGreen 4.505.3 Moisture content of building materials	Building materials with visible signs of water damage shall not be installed. Wall and floor framing shall not be enclosed when the framing members exceed 19-percent moisture content. Moisture content shall be verified in compliance with the following: 1. Moisture content shall be determined with either a probe-type or contact-type moisture meter. Equivalent moisture verification methods may be approved by the enforcing agency and shall satisfy requirements found in Section 101.8 of this code. 2. Moisture readings shall be taken at a point 2 feet (610 mm) to 4 feet (1219 mm) from the grade stamped end of each piece to be verified. 3. At least three random moisture readings shall be performed on wall and floor framing with documentation acceptable to the enforcing agency provided at the time of approval to enclose the wall and floor framing. Insulation products which are visibly wet or have a high moisture content shall be replaced or allowed to dry prior to enclosure in wall or floor cavities. Manufacturers' drying recommendations shall be followed for wet-applied insulation products prior to enclosure	Initials: Date:
Indoor Air Quality & Exhaust	A-4	CALGreen Mandatory	CALGreen 4.506.1 Indoor Air Quality & Exhaust	4.506.1 Bathroom exhaust fans: Each bathroom shall be mechanically ventilated and shall comply with the following: 1. Fans shall be ENERGY STAR compliant and be ducted to terminate outside the building. 2. Unless functioning as a component of a whole house ventilation system, fans must be controlled by a humidity control. a. Humidity controls shall be capable of manual or automatic adjustment between a relative humidity range of less than 50 percent to a maximum of 80 percent. A humidity control may utilize manual or automatic means of adjustment. b. A humidity control may be a separate component to the exhaust fan and is not required to be integral or built-in. Notes: For the purposes of this section, a bathroom is a room which contains a bathtub, shower, or tub/shower combination. Lighting integral to bathroom exhaust fans shall comply with the *California Energy Code*.	Initials: Date:
Environ-mental Comfort	A-4	CALGreen Mandatory	CALGreen 4.507.2 Environmental Comfort	4.507.2 Heating and air-conditioning system design: Heating and air-conditioning systems shall be sized, designed and equipment selected using the following methods: 1. The heat loss and heat gain is established according to *ANSI/* ACCA 1 Manual J-2011 (Residential Load Calculation), ASHRAE handbooks or other equivalent design software or methods. 2. Duct systems are sized according to *ANSI/* ACCA 1 Manual D-2014*(Residential Duct Systems)*, ASHRAE handbooks or other equivalent design software or methods. 3. Select heating and cooling equipment according to *ANSI/ ACCA* 3 Manual S-2014 *(Residential Equipment Selection)* or other equivalent design software or methods. Exception: Use of alternate design temperatures necessary to ensure the systems function are acceptable.	
Installer and Special Inspector Qualifica-tions	A-4	CALGreen Mandatory	CALGreen Installer and special inspector qualifications	**SECTION 702 QUALIFICATIONS** **702.1 Installer training.** HVAC system installers shall be trained and certified in the proper installation of HVAC systems including ducts and equipment by a nationally or regionally recognized training or certification program. Uncertified persons may perform HVAC installations when under the direct supervision and responsibility of a person trained and certified to install HVAC systems or contractor licensed to install HVAC systems. Examples of acceptable HVAC training and certification programs include but are not limited to the following: 1. State certified apprenticeship programs. 2. Public utility training programs. 3. Training programs sponsored by trade, labor or statewide energy consulting or verification organizations. 4. Programs sponsored by manufacturing organizations. 5. Other programs acceptable to the enforcing agency. **702.2 Special inspection.** [HCD] When required by the enforcing agency, the owner or the responsible entity acting as the owner's agent shall employ one or more special inspectors to provide inspection or other duties necessary to substantiate compliance with this code. Special inspectors shall demonstrate competence to the satisfaction of the enforcing agency for the particular type of inspection or task to be performed. In addition to other certifications or qualifications acceptable to the enforcing agency, the following certifications or education may be considered by the enforcing agency when evaluating the qualifications of a special inspector:	
	A-4			1. Certification by a national or regional green building program or standard publisher. 2. Certification by a statewide energy consulting or verification organization, such as HERS raters, building performance contractors, and home energy auditors. 3. Successful completion of a third party apprentice training program in the appropriate trade. 4. Other programs acceptable to the enforcing agency. Notes: 1. Special inspectors shall be independent entities with no financial interest in the materials or the project they are inspecting for compliance with this code. 2. HERS raters are special inspectors certified by the California Energy Commission (CEC) to rate homes in California according to the Home Energy Rating System (HERS).	
Installer and Special Inspector Qualifica-tions	A-4	CALGreen Mandatory	CALGreen Installer and special inspector qualifications	**SECTION 702 QUALIFICATIONS** [BSC-CG] When required by the enforcing agency, the owner or the responsible entity acting as the owner's agent shall employ one or more special inspectors to provide inspection or other duties necessary to substantiate compliance with this code. Special inspectors shall demonstrate competence to the satisfaction of the enforcing agency for the particular type of inspection or task to be performed. In addition, the special inspector shall have a certification from a recognized state, national or international association, as determined by the local agency. The area of certification shall be closely related to the primary job function, as determined by the local agency. Note: Special inspectors shall be independent entities with no financial interest in the materials or the project they are inspecting for compliance to this code. **SECTION 703 VERIFICATIONS** **703.1 Documentation.** Documentation used to show compliance with this code shall include but is not limited to, construction documents, plans, specifications, builder or installer certification, inspection reports, or other methods acceptable to the enforcing agency which demonstrate substantial conformance. When specific documentation or special inspection is necessary to verify compliance, that method of compliance will be specified in the appropriate section or identified in the application checklist.	

Table 4.504.4.1
Adhesive VOC Limit [1,2]
Less Water and Less Exempt Compounds
In Grams per Liter

Architectural Applications	VOC Limit
Indoor carpet adhesives	50
Carpet pad adhesives	50
Outdoor carpet adhesives	150
Wood flooring adhesive	100
Rubber floor adhesives	60
Subfloor adhesives	50
Ceramic tile adhesives	65
VCT and asphalt tile adhesives	50
Drywall and panel adhesives	50
Cove base adhesives	50
Multipurpose construction adhesives	70
Structural glazing adhesives	100
Single-ply roof membrane adhesives	250
Other adhesives not specifically listed	50
Specialty Applications	
PVC welding	510
CPVC welding	490
ABS welding	325
Plastic cement welding	250
Adhesive primer for plastic	550
Contact adhesive	80
Special purpose contact adhesive	250
Structural wood member adhesive	140
Top and Subfloor adhesive	250
Substrate Specific Applications	
Metal to metal	30
Plastic foams	50
Porous material (except wood)	50
Wood	30
Fiberglass	80

1. If an adhesive is used to bond dissimilar substrates together, the adhesive with the highest VOC content shall be allowed.
2. For additional information regarding methods to measure the VOC content specified in this table, see South Coast Air Quality Management District Rule 1168.

Table 4.504.4.2
Sealant VOC Limit
Less Water and Less Exempt Compounds
In Grams per Liter

Sealants	VOC Limit
Architectural	250
Marie deck	760
Nonmembrane roof	300
Roadway	250
Single-ply roof membrane	450
Other	420
Sealant Primers	
Architectural Nonporous Porous	 250 775
Modified Bituminous	500
Marine deck	760
Other	750

Table 4.504.4.3
VOC Content Limits for Architectural Coatings [2,3]
Grams of VOC per Liter of Coating
Less Water and Less Exempt Compounds

Coating Category	VOC Limit
Flat coatings	50
Nonflat coatings	100
Nonflat-high gloss coatings	150
Specialty Coatings	
Aluminum roof coatings	400
Basement specialty coatings	400
Bituminous roof coatings	50
Bituminous roof primers	350
Bond breakers	350
Concrete curing compounds	350
Concrete/masonry sealers	100
Driveway sealers	50
Dry fog coatings	150
Faux finishing coatings	350
Fire resistive coatings	350
Floor coatings	100
Form-release compounds	250
Graphic arts coatings (sign paints)	500
High temperature coatings	420
Industrial maintenance coatings	250
Low solids coatings[1]	120
Magnesite cement coatings	450
Mastic texture coatings	100
Metallic pigmented coatings	500
Multicolor coatings	250
Pretreatment wash primers	420
Primers, sealers and undercoaters	100
Reactive penetrating sealers	350
Recycled coatings	250
Roof coatings	50
Rust preventative coatings	250
Shellacs Clear Opaque	 730 550
Specialty primers, sealers and undercoaters	100
Stains	250
Stone Consolidants	450
Swimming pool coatings	340
Traffic marking coatings	100
Tub and tile refinish coatings	420
Waterproofing membranes	250
Wood coatings	275
Table 4.504.4.3 (cont.)	
Wood preservatives	350
Zinc-rich primers	340

1. Grams of VOC per liter of coating, including water and including exempt compounds
2. The specified limits remain in effect unless revised limits are listed in subsequent columns in the table.
3. Values in this table are derived from those specified by the California air Resources Board, Architectural Coatings Suggested Control Measure, February 1, 2008. More information is available from the Air Resources Board.

Table 4.504.5
Formaldehyde Limits[1]
Maximum Formaldehyde Emissions
in Parts per Million

Product	Current Limit
Hardwood plywood veneer core	0.05
Hardwood plywood composite core	0.05
Particle board	0.09
Medium density fiberboard	0.11
Thin medium density fiberboard[2]	0.13

1. Values in this table are derived from those specified by the California Air Resources Board, Air Toxics Control Measure for Composite Wood as tested in accordance with ASTM E1333. For Additional information, see California Code of Regulations, Title 17, Sections 93120 through 93120.12
2. Thin medium density fiberboard has a maximum thickness of 5/16 inch (8mm).

GREEN BUILDING PRESCRIPTIVE CHECKLIST

NEW CONSTRUCTION, ADDITIONS AND ALTERATIONS R-3 DWELLINGS

These requirements apply to building permits submitted on or after January 1, 2017

Following is a standardized checklist of CALGreen Mandatory Measures that shall be used for additions and alterations required to comply with the green building requirements. Items pre-selected are mandated by CALGreen. Use of the specific checklist shall be submitted with a building permit application. Section 301.1.1 CGBC states Additions and Alterations. [HCD] The Mandatory provisions of Chapter 4 shall be applied to additions or alterations of existing residential buildings where the addition or alteration increases the building's conditioned area, volume, or size. The requirements shall apply only to and/or within the specific area of the addition or alteration.

Green Building Code Acknowledgment

Project Address: T.B.D.

Project Description: 2 bedroom Accessory Dwelling Unit

Building Permit Number: B20-014675

Section 1 – Design Verification:
The designer or design professional has reviewed the plans and certifies the items checked below are hereby incorporated into the project plans and will be implemented into the project in accordance with the requirements set forth in the 2016 California Green Building Code.

Francis Garcia — 3-24-2023
Designer/Design Professional Signature — Date

Francis Garcia — 3-24-2023
Designer/Design Professional Name (Please print) — Date

Footnotes/Resources:

1. South Coast Air Quality Management District (SCAQMD) Rule 1113 for Architectural Coatings standards http://www.aqmd.gov/docs/default-source/rule-book/reg-xi/r1113.pdf
2. South Coast Air Quality Management District (SCAQMD) Rule 1168 for Adhesive and Sealant Applications standards https://www.arb.ca.gov/DRDB/SC/CURHTML/R1168.PDF
3. Bay Area Air Quality Management District Regulation 8, Rule 49 – Aerosol Paint Products http://www.arb.ca.gov/drdb/ba/curhtml/r8-49.htm
4. Searchable database for California Code of Regulations (See Title 17, Section 94522 for aerosol paints and coatings regulations) http://ccr.oal.ca.gov/linkedslice/default.asp?SP=CCR-1000&Action=Welcome

FRANCIS GARCIA
ARCHITECT
925 984 9983
www.francisgarciaarchitect.com

1000 S.F. 2 BEDROOM A.D.U. FOR THE TOWN OF DANVLLE

Rev. No.	Revision

LICENSED ARCHITECT — FRANCIS GARCIA — COMMISSION NO. 10-35 — STATE OF CALIFORNIA

Drawn: FG
Date: 3-24-2023
Scale:

GREEN BUILDING CHECKLIST

A-4

TOWN OF DANVILLE

CERTIFICATE OF COMPLIANCE - RESIDENTIAL PERFORMANCE COMPLIANCE METHOD — CF1R-PRF-01E (Page 1 of 14)

Project Name: Danville ADU — **Calculation Date/Time:** 2023-03-23T14:55:20-07:00
Calculation Description: Title 24 Analysis — **Input File Name:** Danville ADU_Base.ribd22x

GENERAL INFORMATION					
01	Project Name	Danville ADU			
02	Run Title	Title 24 Analysis			
03	Project Location	Varies			
04	City	Danville	05	Standards Version	2022
06	Zip code	94526	07	Software Version	EnergyPro 9.1
08	Climate Zone	12	09	Front Orientation (deg/ Cardinal)	All orientations
10	Building Type	Single family	11	Number of Dwelling Units	1
12	Project Scope	Newly Constructed	13	Number of Bedrooms	2
14	Addition Cond. Floor Area (ft^2)	0	15	Number of Stories	1
16	Existing Cond. Floor Area (ft^2)	n/a	17	Fenestration Average U-factor	0.3
18	Total Cond. Floor Area (ft^2)	1000	19	Glazing Percentage (%)	16.40%
20	ADU Bedroom Count	n/a			

COMPLIANCE RESULTS	
01	Building Complies with Computer Performance
02	This building incorporates features that require field testing and/or verification by a certified HERS rater under the supervision of a CEC-approved HERS provider.
03	This building incorporates one or more Special Features shown below

CERTIFICATE OF COMPLIANCE - RESIDENTIAL PERFORMANCE COMPLIANCE METHOD — CF1R-PRF-01E (Page 2 of 14)

Project Name: Danville ADU — **Calculation Date/Time:** 2023-03-23T14:55:20-07:00
Calculation Description: Title 24 Analysis — **Input File Name:** Danville ADU_Base.ribd22x

ENERGY DESIGN RATINGS	Energy Design Ratings			Compliance Margins		
	Source Energy (EDR1)	Efficiency[1] EDR (EDR2efficiency)	Total[2] EDR (EDR2total)	Source Energy (EDR1)	Efficiency[1] EDR (EDR2efficiency)	Total[2] EDR (EDR2total)
Standard Design	38	45.9	35.1			
Proposed Design						
North Facing	37.8	39.2	33.9	0.2	6.7	1.2
East Facing	37.9	38.9	33.7	0.1	7	1.4
South Facing	37.6	37.7	33	0.4	8.2	2.1
West Facing	37.9	39.9	34.3	0.1	6	0.8
RESULT[3] PASS						

[1]Efficiency EDR includes improvements like a better building envelope and more efficient equipment
[2]Total EDR includes efficiency and demand response measures such as photovoltaic (PV) system and battery
[3]Building complies when source energy, efficiency and total compliance margins are greater than or equal to zero and unmet load hour limits are not exceeded

- Standard Design PV Capacity: 2.12 kWdc
- Proposed PV Capacity Scaling: North (2.12 kWdc) East (2.12 kWdc) South (2.12 kWdc) West (2.12 kWdc)

CERTIFICATE OF COMPLIANCE - RESIDENTIAL PERFORMANCE COMPLIANCE METHOD — CF1R-PRF-01E (Page 3 of 14)

Project Name: Danville ADU — **Calculation Date/Time:** 2023-03-23T14:55:20-07:00
Calculation Description: Title 24 Analysis — **Input File Name:** Danville ADU_Base.ribd22x

ENERGY USE SUMMARY						
Energy Use	Standard Design Source Energy (EDR1) (kBtu/ft^2 -yr)	Standard Design TDV Energy (EDR2) (kTDV/ft^2 -yr)	Proposed Design Source Energy (EDR1) (kBtu/ft^2 -yr)	Proposed Design TDV Energy (EDR2) (kTDV/ft^2 -yr)	Compliance Margin (EDR1)	Compliance Margin (EDR2)
Space Heating	6.73	29.55	2.02	15.55	4.71	14
Space Cooling	0.71	23.36	0.71	23.05	0	0.31
IAQ Ventilation	0.82	8.78	0.64	6.86	0.18	1.92
Water Heating	2.66	27.12	7.21	30.34	-4.55	-3.22
Self Utilization/Flexibility Credit				0		0
North Facing Efficiency Compliance Total	**10.92**	**88.81**	**10.58**	**75.8**	**0.34**	**13.01**
Space Heating	6.73	29.55	2.02	15.41	4.71	14.14
Space Cooling	0.71	23.36	0.72	22.61	-0.01	0.75
IAQ Ventilation	0.82	8.78	0.64	6.86	0.18	1.92
Water Heating	2.66	27.12	7.21	30.34	-4.55	-3.22
Self Utilization/Flexibility Credit				0		0
East Facing Efficiency Compliance Total	**10.92**	**88.81**	**10.59**	**75.22**	**0.33**	**13.59**

CERTIFICATE OF COMPLIANCE - RESIDENTIAL PERFORMANCE COMPLIANCE METHOD — CF1R-PRF-01E (Page 4 of 14)

Project Name: Danville ADU — **Calculation Date/Time:** 2023-03-23T14:55:20-07:00
Calculation Description: Title 24 Analysis — **Input File Name:** Danville ADU_Base.ribd22x

ENERGY USE SUMMARY						
Energy Use	Standard Design Source Energy (EDR1) (kBtu/ft^2 -yr)	Standard Design TDV Energy (EDR2) (kTDV/ft^2 -yr)	Proposed Design Source Energy (EDR1) (kBtu/ft^2 -yr)	Proposed Design TDV Energy (EDR2) (kTDV/ft^2 -yr)	Compliance Margin (EDR1)	Compliance Margin (EDR2)
Space Heating	6.73	29.55	1.91	14.4	4.82	15.15
Space Cooling	0.71	23.36	0.68	21.34	0.03	2.02
IAQ Ventilation	0.82	8.78	0.64	6.86	0.18	1.92
Water Heating	2.66	27.12	7.21	30.34	-4.55	-3.22
Self Utilization/Flexibility Credit				0		0
South Facing Efficiency Compliance Total	**10.92**	**88.81**	**10.44**	**72.94**	**0.48**	**15.87**
Space Heating	6.73	29.55	1.9	14.46	4.83	15.09
Space Cooling	0.71	23.36	0.83	25.41	-0.12	-2.05
IAQ Ventilation	0.82	8.78	0.64	6.86	0.18	1.92
Water Heating	2.66	27.12	7.21	30.34	-4.55	-3.22
Self Utilization/Flexibility Credit				0		0
West Facing Efficiency Compliance Total	**10.92**	**88.81**	**10.58**	**77.07**	**0.34**	**11.74**

CERTIFICATE OF COMPLIANCE - RESIDENTIAL PERFORMANCE COMPLIANCE METHOD — CF1R-PRF-01E (Page 5 of 14)

Project Name: Danville ADU — **Calculation Date/Time:** 2023-03-23T14:55:20-07:00
Calculation Description: Title 24 Analysis — **Input File Name:** Danville ADU_Base.ribd22x

ENERGY USE INTENSITY	Standard Design (kBtu/ft^2 - yr)	Proposed Design (kBtu/ft^2 - yr)	Compliance Margin (kBtu/ft^2 - yr)	Margin Percentage
North Facing				
Gross EUI[1]	22.97	21.62	1.35	5.88
Net EUI[2]	11.66	11.98	-0.32	-2.74
East Facing				
Gross EUI[1]	22.97	21.65	1.32	5.75
Net EUI[2]	11.66	12.02	-0.36	-3.09
South Facing				
Gross EUI[1]	22.97	21.46	1.51	6.57
Net EUI[2]	11.66	11.82	-0.16	-1.37
West Facing				
Gross EUI[1]	22.97	21.64	1.33	5.79
Net EUI[2]	11.66	12	-0.34	-2.92

Notes
1. Gross EUI is Energy Use Total (not including PV) / Total Building Area.
2. Net EUI is Energy Use Total (including PV) / Total Building Area.

CERTIFICATE OF COMPLIANCE - RESIDENTIAL PERFORMANCE COMPLIANCE METHOD — CF1R-PRF-01E (Page 6 of 14)

Project Name: Danville ADU — **Calculation Date/Time:** 2023-03-23T14:55:20-07:00
Calculation Description: Title 24 Analysis — **Input File Name:** Danville ADU_Base.ribd22x

REQUIRED PV SYSTEMS												
01	02	03	04	05	06	07	08	09	10	11	12	
DC System Size (kWdc)	Exception	Module Type	Array Type	Power Electronics	CFI	Azimuth (deg)	Tilt Input	Array Angle (deg)	Tilt: (x in 12)	Inverter Eff. (%)	Annual Solar Access (%)	
2.12	NA	Standard (14-17%)	Fixed	none	true	105-300	n/a	n/a	<=7:12	96	95	

REQUIRED SPECIAL FEATURES
The following are features that must be installed as condition for meeting the modeled energy performance for this computer analysis.
• Indoor air quality, balanced fan
• IAQ Ventilation System: as low as 0.54717 W/CFM
• IAQ Ventilation System Heat Recovery: minimum 80 SRE and 83 ASRE
• IAQ Ventilation System: supply outside air inlet, filter, and H/ERV cores accessible per RACM Reference Manual
• IAQ Ventilation System: fault indicator display
• Insulation below roof deck
• Window overhangs and/or fins

HERS FEATURE SUMMARY
The following is a summary of the features that must be field-verified by a certified HERS Rater as a condition for meeting the modeled energy performance for this computer analysis. Additional detail is provided in the building tables below. Registered CF2Rs and CF3Rs are required to be completed in the HERS Registry
• Quality Insulation Installation (QII)
• Indoor air quality ventilation
• Kitchen range hood
• Minimum Airflow
• Verified EER/EER2
• Verified SEER/SEER2
• Verified Refrigerant Charge
• Fan Efficacy Watts/CFM
• Verified HSPF
• Verified heat pump rated heating capacity
• Duct leakage testing

CERTIFICATE OF COMPLIANCE - RESIDENTIAL PERFORMANCE COMPLIANCE METHOD — CF1R-PRF-01E (Page 7 of 14)

Project Name: Danville ADU — **Calculation Date/Time:** 2023-03-23T14:55:20-07:00
Calculation Description: Title 24 Analysis — **Input File Name:** Danville ADU_Base.ribd22x

BUILDING - FEATURES INFORMATION						
01	02	03	04	05	06	07
Project Name	Conditioned Floor Area (ft^2)	Number of Dwelling Units	Number of Bedrooms	Number of Zones	Number of Ventilation Cooling Systems	Number of Water Heating Systems
Danville ADU	1000	1	2	1	0	1

ZONE INFORMATION						
01	02	03	04	05	06	07
Zone Name	Zone Type	HVAC System Name	Zone Floor Area (ft^2)	Avg. Ceiling Height	Water Heating System 1	Status
Accessory Dwelling	Conditioned	HVAC System1	1000	8	DHW Sys 1	New

OPAQUE SURFACES							
01	02	03	04	05	06	07	08
Name	Zone	Construction	Azimuth	Orientation	Gross Area (ft^2)	Window and Door Area (ft^2)	Tilt (deg)
Front Wall	Accessory Dwelling	Exterior 2x6 Wall	0	Front	300	107.51	90
Left Wall	Accessory Dwelling	Exterior 2x6 Wall	90	Left	213.3	10	90
Back Wall	Accessory Dwelling	Exterior 2x6 Wall	180	Back	300	26	90
Right Wall	Accessory Dwelling	Exterior 2x6 Wall	270	Right	213.3	36.5	90
Attic Roof	Accessory Dwelling	Unvented Roof Attic	n/a	n/a	667	n/a	n/a

OPAQUE SURFACES - CATHEDRAL CEILINGS										
01	02	03	04	05	06	07	08	09	10	11
Name	Zone	Construction	Azimuth	Orientation	Area (ft^2)	Skylight Area (ft^2)	Roof Rise (x in 12)	Roof Reflectance	Roof Emittance	Cool Roof
Vaulted Roof_Front	Accessory Dwelling	Rafter Roof	0	Front	256	4	5	0.1	0.85	No
Vaulted Roof_Back	Accessory Dwelling	Rafter Roof	180	Back	77	0	5	0.1	0.85	No

CERTIFICATE OF COMPLIANCE - RESIDENTIAL PERFORMANCE COMPLIANCE METHOD — CF1R-PRF-01E (Page 8 of 14)

Project Name: Danville ADU — **Calculation Date/Time:** 2023-03-23T14:55:20-07:00
Calculation Description: Title 24 Analysis — **Input File Name:** Danville ADU_Base.ribd22x

ATTIC							
01	02	03	04	05	06	07	08
Name	Construction	Type	Roof Rise (x in 12)	Roof Reflectance	Roof Emittance	Radiant Barrier	Cool Roof
Attic Accessory Dwelling	Attic Roof/Accessory Dwelling	Unventilated	5	0.1	0.85	No	No

FENESTRATION / GLAZING														
01	02	03	04	05	06	07	08	09	10	11	12	13	14	
Name	Type	Surface	Orientation	Azimuth	Width (ft)	Height (ft)	Mult.	Area (ft^2)	U-factor	U-factor Source	SHGC	SHGC Source	Exterior Shading	
Bed2 5046	Window	Front Wall	Front	0	5	4.5	1	22.5	0.29	NFRC	0.21	NFRC	Bug Screen	
Greatfrm L 5046	Window	Front Wall	Front	0	5	4.5	1	22.5	0.29	NFRC	0.21	NFRC	Bug Screen	
Entry Glass Door	Window	Front Wall	Front	0	3	6.67	1	20.01	0.32	NFRC	0.16	NFRC	Bug Screen	
Greatfrm R 5046	Window	Front Wall	Front	0	5	4.5	1	22.5	0.29	NFRC	0.21	NFRC	Bug Screen	
Bed2 2640	Window	Left Wall	Left	90	2.5	4	1	10	0.29	NFRC	0.21	NFRC	Bug Screen	
Bed1 2040	Window	Back Wall	Back	180	2	4	1	8	0.29	NFRC	0.21	NFRC	Bug Screen	
Bath1 4020	Window	Back Wall	Back	180	4	2	1	8	0.29	NFRC	0.21	NFRC	Bug Screen	
Bath2 5020	Window	Back Wall	Back	180	5	2	1	10	0.29	NFRC	0.21	NFRC	Bug Screen	
Kitchen 4036	Window	Right Wall	Right	270	4	3.5	1	14	0.29	NFRC	0.21	NFRC	Bug Screen	
Bed1 5046	Window	Right Wall	Right	270	5	4.5	1	22.5	0.29	NFRC	0.21	NFRC	Bug Screen	
Kitchen Skylight	Skylight	Vaulted Roof_Front	Front	0			1	4	0.49	NFRC	0.27	NFRC		

CERTIFICATE OF COMPLIANCE - RESIDENTIAL PERFORMANCE COMPLIANCE METHOD — CF1R-PRF-01E (Page 9 of 14)

Project Name: Danville ADU — **Calculation Date/Time:** 2023-03-23T14:55:20-07:00
Calculation Description: Title 24 Analysis — **Input File Name:** Danville ADU_Base.ribd22x

OPAQUE DOORS			
01	02	03	04
Name	Side of Building	Area (ft^2)	U-factor
Entry Door	Front Wall	20	0.2

OVERHANGS AND FINS													
01	02	03	04	05	06	07	08	09	10	11	12	13	14
Window	Overhang					Left Fin				Right Fin			
	Depth	Dist Up	Left Extent	Right Extent	Flap Ht.	Depth	Top Up	Dist L	Bot Up	Depth	Top Up	Dist R	Bot Up
Bed2 5046	2	0.1	2	2	0	0	0	0	0	0	0	0	0
Greatfrm L 5046	9.5	0.1	2	2	0	0	0	0	0	0	0	0	0
Entry Glass Door	9.5	0.1	2	2	0	0	0	0	0	0	0	0	0
Greatfrm R 5046	2	0.1	2	2	0	0	0	0	0	0	0	0	0
Bed1 2040	0.75	0.1	2	2	0	0	0	0	0	0	0	0	0
Bath1 4020	0.75	0.1	2	2	0	0	0	0	0	0	0	0	0
Bath2 5020	0.75	0.1	2	2	0	0	0	0	0	0	0	0	0

SLAB FLOORS							
01	02	03	04	05	06	07	08
Name	Zone	Area (ft^2)	Perimeter (ft)	Edge Insul. R-value and Depth	Edge Insul. R-value and Depth	Carpeted Fraction	Heated
Slab-on-Grade	Accessory Dwelling	1000	128.33	none	0	100%	No

CERTIFICATE OF COMPLIANCE - RESIDENTIAL PERFORMANCE COMPLIANCE METHOD — CF1R-PRF-01E (Page 10 of 14)

Project Name: Danville ADU — **Calculation Date/Time:** 2023-03-23T14:55:20-07:00
Calculation Description: Title 24 Analysis — **Input File Name:** Danville ADU_Base.ribd22x

OPAQUE SURFACE CONSTRUCTIONS							
01	02	03	04	05	06	07	08
Construction Name	Surface Type	Construction Type	Framing	Total Cavity R-value	Interior / Exterior Continuous R-value	U-factor	Assembly Layers
Exterior 2x6 Wall	Exterior Walls	Wood Framed Wall	2x6 @ 16 in. O. C.	R-21	None / None	0.064	Inside Finish: Gypsum Board Cavity / Frame: R-21 / 2x6 Exterior Finish: Wood Siding/sheathing/decking
Rafter Roof	Cathedral Ceilings	Wood Framed Ceiling	2x10 @ 24 in. O. C.	R-30	None / None	0.034	Roofing: 10 PSF (Roof Tile/AirGap) Tile Gap: present Roof Deck: Wood Siding/sheathing/decking Cavity / Frame: R-30 / 2x10 Inside Finish: Gypsum Board
Attic Roof/Accessory Dwelling	Attic Roofs	Wood Framed Ceiling	2x4 @ 24 in. O. C.	R-30	None / 0	0.04	Roofing: 10 PSF (Roof Tile/AirGap) Tile Gap: present Roof Deck: Wood Siding/sheathing/decking Cavity / Frame: R-13.0 / 2x4 Around Roof Joists: R-17.0 insul.
Unvented Roof Attic	Ceilings (below attic)	Wood Framed Ceiling	2x4 @ 24 in. O. C.	R-0	None / None	0.481	Cavity / Frame: no insul. / 2x4 Inside Finish: Gypsum Board

BUILDING ENVELOPE - HERS VERIFICATION				
01	02	03	04	05
Quality Insulation Installation (QII)	High R-value Spray Foam Insulation	Building Envelope Air Leakage	CFM50	CFM50
Required	Not Required	N/A	n/a	n/a

CERTIFICATE OF COMPLIANCE - RESIDENTIAL PERFORMANCE COMPLIANCE METHOD — CF1R-PRF-01E (Page 11 of 14)

Project Name: Danville ADU — **Calculation Date/Time:** 2023-03-23T14:55:20-07:00
Calculation Description: Title 24 Analysis — **Input File Name:** Danville ADU_Base.ribd22x

WATER HEATING SYSTEMS								
01	02	03	04	05	06	07	08	09
Name	System Type	Distribution Type	Water Heater Name	Number of Units	Solar Heating System	Compact Distribution	HERS Verification	Water Heater Name (#)
DHW Sys 1	Domestic Hot Water (DHW)	Standard	DHW Heater 1	1	n/a	None	n/a	DHW Heater 1 (1)

WATER HEATERS												
01	02	03	04	05	06	07	08	09	10	11	12	13
Name	Heating Element Type	Tank Type	# of Units	Tank Vol. (gal)	Heating Efficiency Type	Efficiency	Rated Input Type	Input Rating or Pilot	Tank Insulation R-value (Int/Ext)	Standby Loss or Recovery Eff	1st Hr. Rating or Flow Rate	Tank Location
DHW Heater 1	Gas	Consumer Instantaneous	1	0	UEF	0.96	Btu/hr	200000	0	n/a	n/a	

WATER HEATING - HERS VERIFICATION						
01	02	03	04	05	06	07
Name	Pipe Insulation	Parallel Piping	Compact Distribution	Compact Distribution Type	Recirculation Control	Shower Drain Water Heat Recovery
DHW Sys 1 - 1/1	Not Required	Not Required	Not Required	None	Not Required	Not Required

SPACE CONDITIONING SYSTEMS								
01	02	03	04	05	06	07	08	09
Name	System Type	Heating Unit Name	Heating Equipment Count	Cooling Unit Name	Cooling Equipment Count	Fan Name	Distribution Name	Required Thermostat Type
HVAC System1	Heat pump heating cooling	Heat Pump System 1	1	Heat Pump System 1	1	HVAC Fan 1	Air Distribution System 1	Setback

CERTIFICATE OF COMPLIANCE - RESIDENTIAL PERFORMANCE COMPLIANCE METHOD — CF1R-PRF-01E (Page 12 of 14)

Project Name: Danville ADU — **Calculation Date/Time:** 2023-03-23T14:55:20-07:00
Calculation Description: Title 24 Analysis — **Input File Name:** Danville ADU_Base.ribd22x

HVAC - HEAT PUMPS													
01	02	03	04	05	06	07	08	09	10	11	12	13	
Name	System Type	Number of Units	Heating				Cooling				Zonally Controlled	Compressor Type	HERS Verification
			Efficiency Type	HSPF / HSPF2 / COP	Cap 47	Cap 17	Efficiency Type	SEER / SEER2	EER / EER / CEER				
Heat Pump System 1	Central split HP	1	HSPF	11.2	42000	26600	EERSEER	18.3	12.6	Not Zonal	Single Speed	Heat Pump System 1-hers-htpump	

HVAC HEAT PUMPS - HERS VERIFICATION								
01	02	03	04	05	06	07	08	09
Name	Verified Airflow	Airflow Target	Verified EER/EER2	Verified SEER/SEER2	Verified Refrigerant Charge	Verified HSPF/HSPF2	Verified Heating Cap 47	Verified Heating Cap 17
Heat Pump System 1-hers-htpump	Required	350	Required	Required	Yes	Yes	Yes	Yes

HVAC - DISTRIBUTION SYSTEMS											
01	02	03	04	05	06	07	08	09	10	11	12
Name	Type	Design Type	Duct Ins. R-value		Duct Location		Surface Area		Bypass Duct	Duct Leakage	HERS Verification
			Supply	Return	Supply	Return	Supply	Return			
Air Distribution System 1	Unconditioned attic	Non-Verified	R-6	R-6	Attic	Attic	n/a	n/a	No Bypass Duct	Sealed and Tested	Air Distribution System 1-hers-dist

CERTIFICATE OF COMPLIANCE - RESIDENTIAL PERFORMANCE COMPLIANCE METHOD — CF1R-PRF-01E (Page 13 of 14)

Project Name: Danville ADU — **Calculation Date/Time:** 2023-03-23T14:55:20-07:00
Calculation Description: Title 24 Analysis — **Input File Name:** Danville ADU_Base.ribd22x

HVAC DISTRIBUTION - HERS VERIFICATION								
01	02	03	04	05	06	07	08	09
Name	Duct Leakage Verification	Duct Leakage Target (%)	Verified Duct Location	Verified Duct Design	Buried Ducts	Deeply Buried Ducts	Low-leakage Air Handler	Low Leakage Ducts Entirely in Conditioned Space
Air Distribution System 1-hers-dist	Yes	5.0	Not Required	Not Required	Not Required	Credit not taken	Not Required	No

HVAC - FAN SYSTEMS			
01	02	03	04
Name	Type	Fan Power (Watts/CFM)	Name
HVAC Fan 1	HVAC Fan	0.45	HVAC Fan 1-hers-fan

HVAC FAN SYSTEMS - HERS VERIFICATION		
01	02	03
Name	Verified Fan Watt Draw	Required Fan Efficacy (Watts/CFM)
HVAC Fan 1-hers-fan	Required	0.45

INDOOR AIR QUALITY (IAQ) FANS								
01	02	03	04	05	06	07	08	09
Dwelling Unit	Airflow (CFM)	Fan Efficacy (W/CFM)	IAQ Fan Type	Includes Heat/Energy Recovery?	IAQ Recovery Effectiveness - SRE	Includes Fault Indicator Display?	HERS Verification	Status
SFam IADUventRpt 1-1	53	0.54717	Balanced	Yes	83	No	Yes	

CERTIFICATE OF COMPLIANCE - RESIDENTIAL PERFORMANCE COMPLIANCE METHOD — CF1R-PRF-01E (Page 14 of 14)

Project Name: Danville ADU — **Calculation Date/Time:** 2023-03-23T14:55:20-07:00
Calculation Description: Title 24 Analysis — **Input File Name:** Danville ADU_Base.ribd22x

DOCUMENTATION AUTHOR'S DECLARATION STATEMENT

I, I certify that this Certificate of Compliance documentation is accurate and complete.

Documentation Author Name: Jason E Bennett	Documentation Author Signature: Jason Bennett
Company: DP Advanced Engineering	Signature Date: 2023-03-27 17:20:50 — CABEC CERTIFIED ENERGY ANALYST
Address: 3381 Walnut Blvd. Ste. 220	CEA / HERS Certification Identification (if applicable): R19-21-30042
City/State/Zip: Brentwood, CA 94513	Phone: 925-516-3502

RESPONSIBLE PERSON'S DECLARATION STATEMENT

I certify the following under penalty of perjury, under the laws of the State of California:
1. I am eligible under Division 3 of the Business and Professions Code to accept responsibility for the building design identified on this Certificate of Compliance.
2. I certify that the energy features and performance specifications identified on this Certificate of Compliance conform to the requirements of Title 24, Part 1 and Part 6 of the California Code of Regulations.
3. The building design features or system design features identified on this Certificate of Compliance are consistent with the information provided on other applicable compliance documents, worksheets, calculations, plans and specifications submitted to the enforcement agency for approval with this building permit application.

Responsible Designer Name: Francis Garcia	Responsible Designer Signature: Francis Garcia
Company: Francis Garcia Architect	Date Signed: 2023-03-27 17:52:50
Address: 14 Norwood Ave	License: C19820
City/State/Zip: Kensington, CA 94707	Phone: 925-984-9983

Digitally signed by CalCERTS. This digital signature is provided in order to secure the content of this registered document, and in no way implies Registration Provider responsibility for the accuracy of the information.

Easy to Verify at CalCERTS.com

TOWN OF DANVILLE ADU PLAN REVIEW ONLY

ADVANCED ENGINEERING
3381 Walnut Blv

2022 Single-Family Residential Mandatory Requirements Summary

NOTE: Single-family residential buildings subject to the Energy Codes must comply with all applicable mandatory measures, regardless of the compliance approach used. Review the respective section for more information.
(04/2022)

Building Envelope:

§ 110.6(a)1:	**Air Leakage.** Manufactured fenestration, exterior doors, and exterior pet doors must limit air leakage to 0.3 CFM per square foot or less when tested per NFRC-400, ASTM E283, or AAMA/WDMA/CSA 101/I.S.2/A440-2011. *
§ 110.6(a)5:	**Labeling**. Fenestration products and exterior doors must have a label meeting the requirements of § 10-111(a).
§ 110.6(b):	**Field fabricated exterior doors and fenestration** products must use U-factors and solar heat gain coefficient (SHGC) values from Tables 110.6-A, 110.6-B, or JA4.5 for exterior doors. They must be caulked and/or weather-stripped.
§ 110.7:	**Air Leakage.** All joints, penetrations, and other openings in the building envelope that are potential sources of air leakage must be caulked, gasketed, or weather stripped.
§ 110.8(a):	**Insulation Certification by Manufacturers.** Insulation must be certified by the Department of Consumer Affairs, Bureau of Household Goods and Services (BHGS).
§ 110.8(g):	**Insulation Requirements for Heated Slab Floors.** Heated slab floors must be insulated per the requirements of § 110.8(g).
§ 110.8(i):	**Roofing Products Solar Reflectance and Thermal Emittance.** The thermal emittance and aged solar reflectance values of the roofing material must meet the requirements of § 110.8(i) and be labeled per §10-113 when the installation of a cool roof is specified on the CF1R.
§ 110.8(j):	**Radiant Barrier.** When required, radiant barriers must have an emittance of 0.05 or less and be certified to the Department of Consumer Affairs.
§ 150.0(a):	**Roof Deck, Ceiling and Rafter Roof Insulation.** Roof decks in newly constructed attics in climate zones 4 and 8-16 area-weighted average U-factor not exceeding U-0.184. Ceiling and rafter roofs minimum R-22 insulation in wood-frame ceiling; or area-weighted average U-factor must not exceed 0.043. Rafter roof alterations minimum R-19 or area-weighted average U-factor of 0.054 or less. Attic access doors must have permanently attached insulation using adhesive or mechanical fasteners. The attic access must be gasketed to prevent air leakage. Insulation must be installed in direct contact with a roof or ceiling which is sealed to limit infiltration and exfiltration, as specified in § 110.7, including but not limited to placing insulation either above or below the roof deck or on top of a drywall ceiling. *
§ 150.0(b):	**Loose-fill Insulation.** Loose fill insulation must meet the manufacturer's required density for the labeled R-value.
§ 150.0(c):	**Wall Insulation.** Minimum R-13 insulation in 2x4 inch wood framing wall or have a U-factor of 0.102 or less, or R-20 in 2x6 inch wood framing or have a U-factor of 0.071 or less. Opaque non-framed assemblies must have an overall assembly U-factor not exceeding 0.102. Masonry walls must meet Tables 150.1-A or B. *
§ 150.0(d):	**Raised-floor Insulation.** Minimum R-19 insulation in raised wood framed floor or 0.037 maximum U-factor. *
§ 150.0(f):	**Slab Edge Insulation.** Slab edge insulation must meet all of the following: have a water absorption rate, for the insulation material alone without facings, no greater than 0.3 percent; have a water vapor permeance no greater than 2.0 perm per inch; be protected from physical damage and UV light deterioration; and, when installed as part of a heated slab floor, meet the requirements of § 110.8(g).
§ 150.0(g)1:	**Vapor Retarder.** In climate zones 1 through 16, the earth floor of unvented crawl space must be covered with a Class I or Class II vapor retarder. This requirement also applies to controlled ventilation crawl space for buildings complying with the exception to §150.0(d).
§ 150.0(g)2:	**Vapor Retarder.** In climate zones 14 and 16, a Class I or Class II vapor retarder must be installed on the conditioned space side of all insulation in all exterior walls, vented attics, and unvented attics with air-permeable insulation.
§ 150.0(q):	**Fenestration Products.** Fenestration, including skylights, separating conditioned space from unconditioned space or outdoors must have a maximum U-factor of 0.45; or area-weighted average U-factor of all fenestration must not exceed 0.45.

Fireplaces, Decorative Gas Appliances, and Gas Log:

§ 110.5(e)	**Pilot Light.** Continuously burning pilot lights are not allowed for indoor and outdoor fireplaces.
§ 150.0(e)1:	**Closable Doors.** Masonry or factory-built fireplaces must have a closable metal or glass door covering the entire opening of the firebox.
§ 150.0(e)2:	**Combustion Intake.** Masonry or factory-built fireplaces must have a combustion outside air intake, which is at least six square inches in area and is equipped with a readily accessible, operable, and tight-fitting damper or combustion-air control device. *
§ 150.0(e)3:	**Flue Damper.** Masonry or factory-built fireplaces must have a flue damper with a readily accessible control. *

Space Conditioning, Water Heating, and Plumbing System:

§ 110.0-§ 110.3:	**Certification.** Heating, ventilation, and air conditioning (HVAC) equipment, water heaters, showerheads, faucets, and all other regulated appliances must be certified by the manufacturer to the California Energy Commission.
§ 110.2(a):	**HVAC Efficiency.** Equipment must meet the applicable efficiency requirements in Table 110.2-A through Table 110.2-N. *
§ 110.2(b):	**Controls for Heat Pumps with Supplementary Electric Resistance Heaters.** Heat pumps with supplementary electric resistance heaters must have controls that prevent supplementary heater operation when the heating load can be met by the heat pump alone; and in which the cut-on temperature for compression heating is higher than the cut-on temperature for supplementary heating, and the cut-off temperature for compression heating is higher than the cut-off temperature for supplementary heating.
§ 110.2(c):	**Thermostats.** All heating or cooling systems not controlled by a central energy management control system (EMCS) must have a setback thermostat. *
§ 110.3(c)3:	**Insulation.** Unfired service water heater storage tanks and solar water-heating backup tanks must have adequate insulation, or tank surface heat loss rating.
§ 110.3(c)6:	**Isolation Valves.** Instantaneous water heaters with an input rating greater than 6.8 kBtu per hour (2 kW) must have isolation valves with hose bibbs or other fittings on both cold and hot water lines to allow for flushing the water heater when the valves are closed.

5/6/22

2022 Single-Family Residential Mandatory Requirements Summary

§ 110.5:	**Pilot Lights.** Continuously burning pilot lights are prohibited for natural gas: fan-type central furnaces; household cooking appliances (except appliances without an electrical supply voltage connection with pilot lights that consume less than 150 Btu per hour); and pool and spa heaters. *
§ 150.0(h)1:	**Building Cooling and Heating Loads.** Heating and/or cooling loads are calculated in accordance with the ASHRAE Handbook, Equipment Volume, Applications Volume, and Fundamentals Volume; the SMACNA Residential Comfort System Installation Standards Manual; or the ACCA Manual J using design conditions specified in § 150.0(h)2.
§ 150.0(h)3A:	**Clearances.** Air conditioner and heat pump outdoor condensing units must have a clearance of at least five feet from the outlet of any dryer.
§ 150.0(h)3B:	**Liquid Line Drier.** Air conditioners and heat pump systems must be equipped with liquid line filter driers if required, as specified by the manufacturer's instructions.
§ 150.0(j)1:	**Water Piping, Solar Water-heating System Piping, and Space Conditioning System Line Insulation.** All domestic hot water piping must be insulated as specified in § 609.11 of the California Plumbing Code. *
§ 150.0(j)2:	**Insulation Protection.** Piping insulation must be protected from damage, including that due to sunlight, moisture, equipment maintenance, and wind as required by §120.3(b). Insulation exposed to weather must be water retardant and protected from UV light (no adhesive tapes). Insulation covering chilled water piping and refrigerant suction piping located outside the conditioned space must include, or be protected by, a Class I or Class II vapor retarder. Pipe insulation buried below grade must be installed in a waterproof and non-crushable casing or sleeve.
§ 150.0(n)1:	**Gas or Propane Water Heating Systems.** Systems using gas or propane water heaters to serve individual dwelling units must designate a space at least 2.5' x 2.5' x 7' suitable for the future installation of a heat pump water heater, and meet electrical and plumbing requirements, based on the distance between this designated space and the water heater location; and a condensate drain no more than 2" higher than the base of the water heater
§ 150.0(n)3:	**Solar Water-heating Systems.** Solar water-heating systems and collectors must be certified and rated by the Solar Rating and Certification Corporation (SRCC), the International Association of Plumbing and Mechanical Officials, Research and Testing (IAPMO R&T), or by a listing agency that is approved by the executive director.

Ducts and Fans:

§ 110.8(d)3:	**Ducts.** Insulation installed on an existing space-conditioning duct must comply with § 604.0 of the California Mechanical Code (CMC). If a contractor installs the insulation, the contractor must certify to the customer, in writing, that the insulation meets this requirement.
§ 150.0(m)1:	**CMC Compliance.** All air-distribution system ducts and plenums must meet CMC §§ 601.0-605.0 and ANSI/SMACNA-006-2006 HVAC Duct Construction Standards Metal and Flexible 3rd Edition. Portions of supply-air and return-air ducts and plenums must be insulated to R-6.0 or higher; ducts located entirely in conditioned space as confirmed through field verification and diagnostic testing (RA3.1.4.3.8) do not require insulation. Connections of metal ducts and inner core of flexible ducts must be mechanically fastened. Openings must be sealed with mastic, tape, or other duct-closure system that meets the applicable UL requirements, or aerosol sealant that meets UL 723. The combination of mastic and either mesh or tape must be used to seal openings greater than ¼". If mastic or tape is used. Building cavities, air handler support platforms, and plenums designed or constructed with materials other than sealed sheet metal, duct board or flexible duct must not be used to convey conditioned air. Building cavities and support platforms may contain ducts; ducts installed in these spaces must not be compressed. *
§ 150.0(m)2:	**Factory-Fabricated Duct Systems.** Factory-fabricated duct systems must comply with applicable requirements for duct construction, connections, and closures; joints and seams of duct systems and their components must not be sealed with cloth back rubber adhesive duct tapes unless such tape is used in combination with mastic and draw bands.
§ 150.0(m)3:	**Field-Fabricated Duct Systems.** Field-fabricated duct systems must comply with applicable requirements for: pressure-sensitive tapes, mastics, sealants, and other requirements specified for duct construction.
§ 150.0(m)7:	**Backdraft Damper.** Fan systems that exchange air between the conditioned space and outdoors must have backdraft or automatic dampers.
§ 150.0(m)8:	**Gravity Ventilation Dampers.** Gravity ventilating systems serving conditioned space must have either automatic or readily accessible, manually operated dampers in all openings to the outside, except combustion inlet and outlet air openings and elevator shaft vents.
§ 150.0(m)9:	**Protection of Insulation.** Insulation must be protected from damage due tosunlight, moisture, equipment maintenance, and wind. Insulation exposed to weather must be suitable for outdoor service (e.g., protected by aluminum, sheet metal, painted canvas, or plastic cover). Cellular foam insulation must be protected as above or painted with a water retardant and solar radiation-resistant coating.
§ 150.0(m)10:	**Porous Inner Core Flex Duct.** Porous inner cores of flex ducts must have a non-porous layer or air barrier between the inner core and outer vapor barrier.
§ 150.0(m)11:	**Duct System Sealing and Leakage Test.** When space conditioning systems use forced air duct systems to supply conditioned air to an occupiable space, the ducts must be sealed and duct leakage tested, as confirmed through field verification and diagnostic testing, in accordance with Reference Residential Appendix RA3.1.
§ 150.0(m)12:	**Air Filtration.** Space conditioning systems with ducts exceeding 10 feet and the supply side of ventilation systems must have MERV 13 or equivalent filters. Filters for space conditioning systems must have a two inch depth or can be one inch if sized per Equation 150.0-A. Clean-filter pressure drop and labeling must meet the requirements in §150.0(m)12. Filters must be accessible for regular service. Filter racks or grilles must use gaskets, sealing, or other means to close gaps around the inserted filters to and prevents air from bypassing the filter. *

5/6/22

2022 Single-Family Residential Mandatory Requirements Summary

§ 150.0(m)13:	**Space Conditioning System Airflow Rate and Fan Efficacy.** Space conditioning systems that use ducts to supply cooling must have a hole for the placement of a static pressure probe, or a permanently installed static pressure probe in the supply plenum. Airflow must be ≥ 350 CFM per ton of nominal cooling capacity, and an air-handling unit fan efficacy ≤ 0.45 watts per CFM for gas furnace air handlers and ≤ 0.58 watts per CFM for all others. Small duct high velocity systems must provide an airflow ≥ 250 CFM per ton of nominal cooling capacity, and an air-handling unit fan efficacy ≤ 0.62 watts per CFM. Field verification testing is required in accordance with Reference Residential Appendix RA3.3. *

Ventilation and Indoor Air Quality:

§ 150.0(o)1:	**Requirements for Ventilation and Indoor Air Quality**. All dwelling units must meet the requirements of ASHRAE Standard 62.2, Ventilation and Acceptable Indoor Air Quality in Residential Buildings subject to the amendments specified in § 150.0(o)1. *
§ 150.0(o)1B:	**Central Fan Integrated (CFI) Ventilation Systems.** Continuous operation of CFI air handlers is not allowed to provide the whole-dwelling unit ventilation airflow required per §150.0(o)1C. A motorized damper(s) must be installed on the ventilation duct(s) that prevents all airflow through the space conditioning duct system when the damper(s) is closed andcontrolled per §150.0(o)1Biii&iv. CFI ventilation systems must have controls that track outdoor air ventilation run time, and either open or close the motorized damper(s) for compliance with §150.0(o)1C.
§ 150.0(o)1C:	**Whole-Dwelling Unit Mechanical Ventilation for Single-Family Detached and townhouses .** Single-family detached dwelling units, and attached dwelling units not sharing ceilings or floors with other dwelling units, occupiable spaces, public garages, or commercial spaces must have mechanical ventilation airflow specified in § 150.0(o)1Ci-iii.
§ 150.0(o)1G:	**Local Mechanical Exhaust.** Kitchens and bathrooms must have local mechanical exhaust; nonenclosed kitchens must have demand-controlled exhaust system meeting requirements of §150.0(o)1Giii,enclosed kitchens and bathrooms can use demand-controlled or continuous exhaust meeting §150.0(o)1Giii-iv. Airflow must be measured by the installer per §150.0(o)1Gv, and rated for sound per §150.0(o)1Gvi. *
§ 150.0(o)1H&I:	**Airflow Measurement and Sound Ratings of Whole-Dwelling Unit Ventilation Systems.** The airflow required per § 150.0(o)1C must be measured by using a flow hood, flow grid, or other airflow measuring device at the fan's inlet or outlet terminals/grilles per Reference Residential Appendix RA3.7. Whole-Dwelling unit ventilation systems must be rated for sound per ASHRAE 62.2 §7.2 at no less than the minimum airflow rate required by § 150.0(o)1C.
§ 150.0(o)2:	**Field Verification and Diagnostic Testing.** Whole-Dwelling Unit ventilation airflow, vented range hood airflow and sound rating, and HRV and ERV fan efficacy must be verified in accordance with Reference Residential Appendix RA3.7. Vented range hoods must be verified per Reference Residential Appendix RA3.7.4.3 to confirm if it is rated by HVI or AHAM to comply with the airflow rates and sound requirements per §150.0(o)1G

Pool and Spa Systems and Equipment:

§ 110.4(a):	**Certification by Manufacturers.** Any pool or spa heating system or equipment must be certified to have all of the following: compliance with the Appliance Efficiency Regulations and listing in MAEDbS; an on-off switch mounted outside of the heater that allows shutting off the heater without adjusting the thermostat setting; a permanent weatherproof plate or card with operating instructions; and must not use electric resistance heating. *
§ 110.4(b)1:	**Piping.** Any pool or spa heating system or equipment must be installed with at least 36 inches of pipe between the filter and the heater, or dedicated suction and return lines, or built-in or built-up connections to allow for future solar heating.
§ 110.4(b)2:	**Covers.** Outdoor pools or spas that have a heat pump or gas heater must have a cover.
§ 110.4(b)3:	**Directional Inlets and Time Switches for Pools.** Pools must have directional inlets that adequately mix the pool water, and a time switch that will allow all pumps to be set or programmed to run only during off-peak electric demand periods.
§ 110.5:	**Pilot Light**. Natural gas pool and spa heaters must not have a continuously burning pilot light.
§ 150.0(p):	**Pool Systems and Equipment Installation.** Residential pool systems or equipment must meet the specified requirements for pump sizing, flow rate, piping, filters, and valves. *

Lighting:

§ 110.9:	**Lighting Controls and Components.** All lighting control devices and systems, ballasts, and luminaires must meet the applicable requirements of § 110.9. *
§ 150.0(k)1A:	**Luminaire Efficacy.** All installed luminaires must meet the requirements in Table 150.0-A, except lighting integral to exhaust fans, kitchen range hoods, bath vanity mirrors, and garage door openers; navigation lighting less than 5 watts; and lighting internal to drawers, cabinets, and linen closets with an efficacy of at least 45 lumens per watt.
§ 150.0(k)1B:	**Screw based luminaires.** Screw based luminaires must contain lamps that comply with Reference Joint Appendix JA8. *
§ 150.0(k)1C:	**Recessed Downlight Luminaires in Ceilings.** Luminaires recessed into ceilings must not contain screw based sockets, must be airtight, and must be sealed with a gasket or caulk. California Electrical Code § 410.116 must also be met.
§ 150.0(k)1D:	**Light Sources in Enclosed or Recessed Luminaires.** Lamps and other separable light sources that are not compliant with the JA8 elevated temperature requirements, including marking requirements, must not be installed in enclosed or recessed luminaires.
§ 150.0(k)1E:	**Blank Electrical Boxes.** The number of electrical boxes that are more than five feet above the finished floor and do not contain a luminaire or other device shall be no more than the number of bedrooms. These boxes must be served by a dimmer, vacancy sensor control, low voltage wiring, or fan speed control.
§ 150.0(k)1F:	**Lighting Integral to Exhaust Fans.** Lighting integral to exhaust fans (except when installed by the manufacturer in kitchen exhaust hoods) must meet the applicable requirements of § 150.0(k). *

5/6/22

2022 Single-Family Residential Mandatory Requirements Summary

§ 150.0(k)1G:	**Screw based luminaires.** Screw based luminaires must contain lamps that comply with Reference Joint Appendix JA8. *
§ 150.0(k)1H:	**Light Sources in Enclosed or Recessed Luminaires.** Lamps and other separable light sources that are not compliant with the JA8 elevated temperature requirements, including marking requirements, must not be installed in enclosed or recessed luminaires.
§ 150.0(k)1I:	**Light Sources in Drawers, Cabinets, and Linen Closets.** Light sources internal to drawers, cabinetry or linen closets are not required to comply with Table 150.0-A or be controlled by vacancy sensors provided that they are rated to consume no more than 5 watts of power, emit no more than 150 lumens, and are equipped with controls that automatically turn the lighting off when the drawer, cabinet or linen closet is closed.
§ 150.0(k)2A:	**Interior Switches and Controls.** All forward phase cut dimmers used with LED light sources must comply with NEMA SSL 7A.
§ 150.0(k)2B:	**Interior Switches and Controls.** Exhaust fans must be controlled separately from lighting systems. *
§ 150.0(k)2A:	**Accessible Controls.** Lighting must have readily accessible wall-mounted controls that allow the lighting to be manually turned on and off. *
§ 150.0(k)2B:	**Multiple Controls.** Controls must not bypass a dimmer, occupant sensor, or vacancy sensor function if the dimmer or sensor is installed to comply with § 150.0(k).
§ 150.0(k)2C:	**Mandatory Requirements.** Lighting controls must comply with the applicable requirements of § 110.9.
§ 150.0(k)2D:	**Energy Management Control Systems.** An energy management control system (EMCS) may be used to comply with dimming, occupancy, and control requirements if it provides the functionality of the specified control per § 110.9 and the physical controls specified in § 150.0(k)2A.
§ 150.0(k)2E:	**Automatic Shutoff Controls.** In bathrooms, garages, laundry rooms, utility rooms and walk-in closets, at least one installed luminaire must be controlled by an occupancy or vacancy sensor providing automatic-off functionality. Lighting inside drawers and cabinets with opaque fronts or doors must have controls that turn the light off when the drawer or door is closed.
§ 150.0(k)2F:	**Dimmers.** Lighting in habitable spaces (e.g., living rooms, dining rooms, kitchens, and bedrooms) must have readily accessible wall-mounted dimming controls that allow the lighting to be manually adjusted up and down. Forward phase cut dimmers controlling LED light sources in these spaces must comply with NEMA SSL 7A.
§ 150.0(k)2K:	**Independent controls.** Integrated lighting of exhaust fans shall be controlled independently from the fans. Lighting under cabinets or shelves, lighting in display cabinets, and switched outlets must be controlled separately from ceiling-installed lighting.
§ 150.0(k)3A:	**Residential Outdoor Lighting.** For single-family residential buildings, outdoor lighting permanently mounted to a residential building, or to other buildings on the same lot, must have a manual on/off switch and either a photocell and motion sensor or automatic time switch control) or an astronomical time clock. An energy management control system that provides the specified control functionality and meets all applicable requirements may be used to meet these requirements.
§ 150.0(k)4:	**Internally illuminated address signs.** Internally illuminated address signs must either comply with § 140.8 or consume no more than 5 watts of power.
§ 150.0(k)5:	**Residential Garages for Eight or More Vehicles.** Lighting for residential parking garages for eight or more vehicles must comply with the applicable requirements for nonresidential garages in §§ 110.9, 130.0, 130.1, 130.4, 140.6, and 141.0.

Solar Readiness:

§ 110.10(a)1:	**Single-family Residences.** Single-family residences located in subdivisions with 10 or more single-family residences and where the application for a tentative subdivision map for the residences has been deemed complete and approved by the enforcement agency, which do not have a photovoltaic system installed, must comply with the requirements of § 110.10(b)-(e).
§110.10(b)1A:	**Minimum Solar Zone Area.** The solar zone must have a minimum total area as described below. The solar zone must comply with access, pathway, smoke ventilation, and spacing requirements as specified in Title 24, Part 9 or other parts of Title 24 or in any requirements adopted by a local jurisdiction. The solar zone total area must be comprised of areas that have no dimension less than 5 feet and are no less than 80 square feet each for buildings with roof areas less than or equal to 10,000 square feet or no less than 160 square feet each for buildings with roof areas greater than 10,000 square feet. For single-family residences, the solar zone must be located on the roof or overhang of the building and have a total area no less than 250 square feet. *
§ 110.10(b)2:	**Azimuth.** All sections of the solar zone located on steep-sloped roofs must have an azimuth between 90-300° of true north.
§ 110.10(b)3A:	**Shading.** The solar zone must not contain any obstructions, including but not limited to: vents, chimneys, architectural features, and roof mounted equipment.
§ 110.10(b)3B:	**Shading.** Any obstruction located on the roof or any other part of the building that projects above a solar zone must be located at least twice the horizontal distance of the height difference between the highest point of the obstruction and the horizontal projection of the nearest point of the solar zone, measured in the vertical plane. *
§ 110.10(b)4:	**Structural Design Loads on Construction Documents.** For areas of the roof designated as a solar zone, the structural design loads for roof dead load and roof live load must be clearly indicated on the construction documents.
§ 110.10(c):	**Interconnection Pathways.** The construction documents must indicate: a location reserved for inverters and metering equipment and a pathway reserved for routing of conduit from the solar zone to the point of interconnection with the electrical service; and for single-family residences and central water-heating systems, a pathway reserved for routing plumbing from the solar zone to the water-heating system.
§ 110.10(d):	**Documentation.** A copy of the construction documents or a comparable document indicating the information from § 110.10(b)-(c) must be provided to the occupant.
§ 110.10(e)1:	**Main Electrical Service Panel.** The main electrical service panel must have a minimum busbar rating of 200 amps.
§ 110.10(e)2:	**Main Electrical Service Panel.** The main electrical service panel must have a reserved space to allow for the installation of a double pole circuit breaker for a future solar electric installation. The reserved space must be permanently marked as "For Future Solar Electric."

Electric and Energy Storage Ready:

5/6/22

2022 Single-Family Residential Mandatory Requirements Summary

§ 150.0(s)	**Energy Storage System (ESS) Ready.** All single-family residences must meet all of the following: Either ESS-ready interconnection equipment with backed up capacity of 60 amps or more and four or more ESS supplied branch circuits, or a dedicated raceway from the main service to a subpanel that supplies the branch circuits in § 150.0(s); at least four branch circuits must be identified and have their source collocated at a single panelboard suitable to be supplied by the ESS, with one circuit supplying the refrigerator, one lighting circuit near the primary exit, and one circuit supplying a sleeping room receptacle outlet; main panelboard must have a minimum busbar rating of 225 amps; sufficient space must be reserved to allow future installation of a system isolation equipment/transfer switch within 3' of the main panelboard, with raceways installed between the panelboard and the switch location to allow the connection of backup power source.
§ 150.0(t)	**Heat Pump Space Heater Ready.** Systems using gas or propane furnaces to serve individual dwelling units must include: A dedicated unobstructed 240V branch circuit wiring installed within 3' of the furnace with circuit conductors rated at least 30 amps with the blank cover identified as "240V ready;" and a reserved main electrical service panel space to allow for the installation of a double pole circuit breaker permanently marked as "For Future 240V use."
§ 150.0(u)	**Electric Cooktop Ready.** Systems using gas or propane cooktop to serve individual dwelling units must include: A dedicated unobstructed 240V branch circuit wiring installed within 3' of the cooktop with circuit conductors rated at least 50 amps with the blank cover identified as "240V ready;" and a reserved main electrical service panel space to allow for the installation of a double pole circuit breaker permanently marked as "For Future 240V use."
§ 150.0(v)	**Electric Clothes Dryer Ready.** Clothes dryer locations with gas or propane plumbing to serve individual dwelling units must include: A dedicated unobstructed 240V branch circuit wiring installed within 3' of the dryer location with circuit conductors rated at least 30 amps with the blank cover identified as "240V ready;" and a reserved main electrical service panel space to allow for the installation of a double pole circuit breaker permanently marked as "For Future 240V use."

*Exceptions may apply.

5/6/22

ADVANCED ENGINEERING
STRUCTURAL ENGINEERING SOLUTIONS

TITLE 24 SUMMARY OF FEATURES

PROJECT: TOWN OF DANVILLE ADU **DATE:** 3-23-23
JOB NO: G010120 **ANALYST:** J. BENNETT
ADDRESS: VARIES

ENVELOPE INSULATION

EXTERIOR WALLS:
R-21 IN 2x6
R-15 IN 2X4 FURRED RETAINING WALLS
FOUNDATION:
SLAB
ROOF OVER LIVING SPACE:
R-30 BETWEEN RAFTERS
UNVENTILATED ATTIC

WINDOW PERFORMANCE

MAXIMUM WINDOW PERFORMANCE VALUES (U-FACTOR / SHGC)
WINDOWS: .29/.21
FRENCH DOORS: .32/.16
MAXIMUM SKYLIGHT PERFORMANCE VALUES (U-FACTOR / SHGC)
FIXED: .48/.29 [VELUX FCM OR EQUIV.]

DOMESTIC HOT WATER

GAS TANKLESS WATER HEATER (96% UEF MINIMUM)

SOLAR

2.12 KW MINIMUM (ALL WALLS ABOVE GRADE)
2.10 KW MINIMUM (WALLS BELOW GRADE)
ACCEPTABLE ORIENTATION:
(DEGREES EAST OF TRUE NORTH) 300° 130° N

HERS VERIFICATIONS

BUILDING
- QUALITY INSULATION INSTALLATION (QII)
- INDOOR AIR QUALITY VENTILATION
- KITCHEN RANGE HOOD
- MINIMUM AIRFLOW [350 CFM/TON]
- VERIFIED EER [12.6]
- VERIFIED SEER [18.3]
- VERIFIED REFRIGERANT CHARGE
- FAN EFFICACY WATTS/CFM [0.45]
- VERIFIED HSPF [11.2]
- VERIFIED HEAT PUMP RATED HEATING CAPACITY
- DUCT LEAKAGE TESTING [5%]

SPACE HEATING & COOLING

HEAT PUMP (11.2 HSPF, 18.3 SEER, 12.6 EER MINIMUM)
MITSUBISHI MXZ-SM36NAM OR EQUIVALENT
AHRI # 207517151

DUCTS

SUPPLY AIR DUCTS IN ATTIC
DUCTS IN UNCONDITIONED SPACE TO HAVE R-6 INSULATION

INDOOR AIR QUALITY

PANASONIC FV-10VE2 ENERGY RECOVER VENTILATOR OR EQ.

3381 Walnut Blvd. Ste.220 Brentwood, CA 94513 PH: 925.516.3502 FX: 925.262.4662 W: WWW.ADVANCEDENGINEERINGINC.COM

PROPERTY OF ADVANCED ENGINEERING

ADVANCED ENGINEERING
3381 Walnut Blvd. Ste. 220
Brentwood, CA 94513
Office: 925.516.3502
Fax: 925.262.4662

NOTE: THE LOADS SHOWN ARE ONLY ONE OF THE CRITERIA AFFECTING THE SELECTION OF HVAC EQUIPMENT. OTHER RELEVANT DESIGN FACTORS SUCH AS AIRFLOW, OUTDOOR DESIGN TEMPERATURES, COIL SIZING, AVAILABILITY OF EQUIPMENT, OVERSIZING MARGIN, ETC. MUST ALSO BE CONSIDERED. IT IS THE HVAC DESIGNER'S RESPONSIBILITY TO CONSIDER ALL FACTORS WHEN SELECTING THE HVAC EQUIPMENT. MECHANICAL CONTRACTOR MUST WARRANT THE INSTALLED SYSTEM TO MEET ALL ENERGY STAR REQUIREMENTS IF APPLICABLE. THE MINIMUM SIZE OF THE RESIDENTIAL HEATING SYSTEMS IS REGULATED BY THE CALIFORNIA BUILDING CODE (CBC), SECTION 310.11. THE CBC REQUIRES THAT THE HEATING SYSTEM BE CAPABLE OF MAINTAINING A TEMPERATURE OF 70° AT A DISTANCE THREE FEET ABOVE THE FLOOR THROUGHOUT THE CONDITIONED SPACE OF THE BUILDING. DP ADVANCED ENGINEERING, INC. DOES NOT WARRANT OR ASSUME RESPONSIBILITY FOR PERFORMANCE OR INSTALLATION OF ANY EQUIPMENT LABELED OR ALLUDED TO ON ANY CALCULATION PRODUCED BY DP ADVANCED ENGINEERING, INC. BUILDER AND ALL SUB-CONTRACTORS WORKING ON THE PROJECT INVOLVING TITLE-24 UNDERSTAND AND ACCEPT ALL ASPECTS OF THE TITLE-24 SUBMITTED TO BUILDING DEPARTMENT PERTAINING TO THEIR WORK. ALL SUB-CONTRACTORS ARE RESPONSIBLE TO CONTACT THE BUILDER AND DP ADVANCED ENGINEERING, INC. BEFORE BEGINNING WORK IF THERE IS ANY ERROR IN ANY CALCULATION THAT WOULD PREVENT THE SUB-CONTRACTOR FROM WARRANTING THE PERFORMANCE OF HIS PRODUCT WHICH INCLUDED ANY ENERGY STAR PROCEDURES.

TOWN OF DANVILLE
ACCESSORY DWELLING UNIT
DANVILLE, CALIFORNIA

1
2
3
4
5
6

PLEASE NOTE THE REVISION NUMBER AND DATE ARE FOR ENERGY SHEETS ONLY.

Sheet Description:
ENERGY CALCULATIONS

2022 SINGLE FAMILY RESIDENTIAL MANDATORY MEASURES SUMMARY AND SUPPLEMENTARY SHEETS

Initial Issue Date: March 27, 2023
Energy Analyst: J. Bennett Ext. 26
Project Manager: J. Peek Ext. 23
Job No. G010120
Sheet No. ECM

GENERAL NOTES

1. ALL MATERIAL AND WORKMANSHIP SHALL CONFORM TO THE 2022 EDITION OF THE CALIFORNIA BUILDING CODE (CBC); THE MOST RECENT VERSIONS OF THE CMC, CPC AND CEC; ALL APPLICABLE LOCAL CODES AND ORDINANCES; AND LOCALLY ACCEPTED STANDARDS OF PRACTICE.
2. THESE DRAWINGS AND SPECIFICATIONS HAVE BEEN PREPARED EXCLUSIVELY FOR USE ON THIS PROJECT ONLY. THE DRAWINGS AND SPECIFICATIONS, OR PORTIONS THEREOF, SHALL NOT BE USED ON OTHER PROJECTS OR ADDITIONS TO THIS PROJECT EXCEPT BY AGREEMENT IN WRITING AND WITH APPROPRIATE COMPENSATION OF THE ENGINEER.
3. WRITTEN INFORMATION AND DIMENSIONS SHALL TAKE PRECEDENCE OVER GRAPHIC INFORMATION.
4. STRUCTURAL DRAWINGS SHOW ONLY THE BASIC STRUCTURAL SYSTEMS. REFER TO THE ARCHITECTURAL, MECHANICAL, ELECTRICAL AND CIVIL DRAWINGS FOR ITEMS WHICH REQUIRE SPECIAL PROVISIONS DURING CONSTRUCTION.
5. SEE DRAWINGS OTHER THAN STRUCTURAL FOR: TYPES OF FINISH MATERIALS AND THEIR LOCATIONS, FOR DEPRESSIONS IN FLOOR SLABS, FOR OPENINGS IN WALLS AND FLOORS REQUIRED BY ARCHITECTURAL AND MECHANICAL FEATURES, FOR STAIRS, CURBS, ETC.
6. ALL DETAIL REFERENCES SHALL BE CONSIDERED "TYPICAL". THE INTENT OF TYPICAL DETAILS SHALL BE APPLIED TO SIMILAR CONDITIONS ELSEWHERE IN THE PROJECT. WHEN DETAILS LABELED "SIMILAR" ARE GIVEN ON DRAWINGS, THE CONTRACTOR SHALL APPLY THE GENERAL INTENT OF THE DETAIL TO THE REFERENCED CONDITION.
7. **THE CONTRACTOR SHALL REVIEW ALL DRAWINGS IMMEDIATELY UPON RECEIPT AND SHALL VERIFY ALL DIMENSIONS AND SITE CONDITIONS BEFORE STARTING WORK. THE ENGINEER SHALL BE NOTIFIED OF ANY DISCREPANCIES.**
8. STRUCTURAL DRAWINGS AND SPECIFICATIONS FOR THIS WORK HAVE BEEN PREPARED IN ACCORDANCE WITH GENERALLY ACCEPTED ENGINEERING STANDARDS OF PRACTICE TO MEET THE MINIMUM REQUIREMENTS OF THE APPLICABLE EDITION OF THE CBC. ANY OMISSIONS OR DISCREPANCIES ON THE PLANS OR ANY DEVIATIONS FROM THE PLANS THAT ARE NECESSITATED BY FIELD CONDITIONS OR ANY CONDITION DIFFERENT FROM THOSE INDICATED ON THE PLANS SHOULD BE BROUGHT TO THE ATTENTION OF THE ENGINEER PRIOR TO CONTINUING CONSTRUCTION. ALL WORK SHALL BE COORDINATED SO COOPERATION BETWEEN THE TRADES IS ACCOMPLISHED.
9. CONNECTIONS AND IMPLIED CONSTRUCTION ASSEMBLIES THAT ARE NOT SPECIFICALLY DESCRIBED OR DETAILED SHALL BE CONSTRUCTED USING STANDARD CONSTRUCTION PRACTICES IN COMPLIANCE WITH THE GOVERNING CODES AND LOCAL ORDINANCES.
10. THE STRUCTURAL SYSTEMS HAVE BEEN DESIGNED TO CARRY THE SUPERIMPOSED LIVE LOADS AS PRESCRIBED BY THE CALIFORNIA BUILDING CODE AND IN ACCORDANCE WITH STANDARD ENGINEERING PRACTICES, WITH NO SPECIAL PROVISIONS TO CARRY CONCENTRATED LOADS FROM STORAGE AND HANDLING OF CONSTRUCTION MATERIALS OR FROM OPERATION OF CONSTRUCTION EQUIPMENT.
11. DRAWINGS AND SPECIFICATIONS REPRESENT FINISHED STRUCTURE. CONTRACTOR SHALL BE RESPONSIBLE FOR MEANS AND METHODS OF CONSTRUCTION, INCLUDING BUT NOT LIMITED TO SHORING AND TEMPORARY BRACING. THE CONTRACTOR SHALL TAKE ALL NECESSARY MEASURE TO INSURE SAFETY OF ALL PERSONS AND STRUCTURES AT THE SITE AND ADJACENT TO THE SITE. OBSERVATION VISITS TO THE SITE BY THE ARCHITECT, ENGINEER OR CONSTRUCTION MANAGER SHALL NOT RELIEVE THE CONTRACTOR OF SUCH RESPONSIBILITY.
12. THE CONTRACTOR IS RESPONSIBLE FOR AND SHALL MAINTAIN THE INTEGRITY OF ALL SCAFFOLDING, BRACING, AND SHORING SYSTEMS AS REQUIRED FOR INSTALLATION, STABILITY AND SAFETY OF NEW WORK AND EXISTING STRUCTURES, PIPING, AND FOUNDATION SYSTEMS. CONTRACTOR SHALL ALSO PROVIDE FOR THE SAFETY OF PEDESTRIANS AND JOB SITE PERSONNEL. AT ALL TIMES, THE CONTRACTOR SHALL BE SOLELY AND COMPLETELY RESPONSIBLE FOR THE CONDITION OF THE JOB SITE, INCLUDING SAFETY OF PERSONS AND PROPERTY. THE CONTRACTOR SHALL PROTECT NEW AND EXISTING CONSTRUCTION FROM INCLEMENT WEATHER AND PHYSICAL DAMAGE.
13. CONTRACTOR SHALL COORDINATE WITH THE CITY TO ENSURE ALL INSPECTIONS (INCLUDING SPECIAL INSPECTIONS) ARE COMPLETED PER THE LOCAL BUILDING DEPARTMENT REQUIREMENTS. APPROVALS BY BUILDING INSPECTORS SHALL NOT CONSTITUTE AUTHORITY TO DEVIATE FROM THE PLANS AND SPECIFICATIONS.
14. IF PROVIDED, OBSERVATION OF THE CONSTRUCTION BY THE ENGINEER IS INTENDED TO IMPROVE THE PROBABILITY THAT THE WORK IS COMPLETED IN GENERAL CONFORMANCE WITH THE ENGINEERING INTENT OF THE DESIGN. OBSERVATION OF THE CONSTRUCTION BY THE ENGINEER DOES NOT RELIEVE THE CONTRACTOR OF THE RESPONSIBILITY FOR COMPLETING THE CONSTRUCTION IN ACCORDANCE WITH THE APPROVED CONSTRUCTION DOCUMENTS, GENERALLY ACCEPTED STANDARDS OF PRACTICE, AND CITY/COUNTY REQUIRED INSPECTIONS.
15. ALL FRAMING HARDWARE SHALL BE MANUFACTURED BY SIMPSON STRONGTIE, OR EQUAL. ALTERNATE FRAMING HARDWARE MANUFACTURERS SHALL NOT BE PROVIDED UNLESS SPECIFICALLY AUTHORIZED BY THE ENGINEER AND THE BUILDING OWNER. IF ALTERNATE HARDWARE SYSTEMS ARE AUTHORIZED, THE CONTRACTOR SHALL FORWARD COMPLETE SHOP DRAWINGS FOR REVIEW AND APPROVAL.

FOUNDATION NOTES

1. FOOTING DEPTH DIMENSION ARE INTO UNDISTURBED SOIL OR ENGINEERED FILL APPROVED BY THE GEOTECHNICAL ENGINEER, IF APPLICABLE. FINAL FOOTING DEPTH SHALL BE MEASURED FROM LOWEST ADJACENT GRADE OR BOTTOM OF UNAPPROVED FILL.
2. REMOVE LOOSE SOIL AND STANDING WATER FROM FOUNDATION EXCAVATIONS PRIOR TO PLACING CONCRETE. THE GEOTECHNICAL ENGINEER (IF APPLICABLE) SHALL INSPECT AND APPROVE ALL EXCAVATIONS, SOIL COMPACTION WORK PRIOR TO PLACEMENT OF ANY REBAR OR CONCRETE, SHORING INSTALLATIONS, BACKFILL MATERIALS AND BACK FILLING PROCEDURES.
3. MINIMUM CLEARANCE OF 8" SHALL BE PROVIDED BETWEEN EARTH AND WOOD IN ALL LOCATIONS PER CBC 2304.12
4. DRAINAGE AND SURFACE RUNOFF:
   PERIMETER GRADES SHOULD BE POSITIVELY SLOPED AT ALL TIMES TO PROVIDE FOR RAPID REMOVAL OF SURFACE WATER RUNOFF AWAY FROM THE FOUNDATION SYSTEMS AND TO PREVENT PONDING OF WATER UNDER FOUNDATIONS OR SEEPAGE TOWARD THE FOUNDATION SYSTEMS AT ANY TIME DURING OR AFTER CONSTRUCTION. PONDED WATER MAY CAUSE UNDESIRABLE SOIL SWELL OR SETTLEMENT AND LOSS OF STRENGTH.
   A. AS A MINIMUM REQUIREMENT, FINISHED GRADES SHOULD HAVE SLOPES OF AT LEAST 5 PERCENT WITHIN 10 FEET FROM THE EXTERIOR WALLS AND AT RIGHT ANGLES TO ALLOW SURFACE WATER TO DRAIN POSITIVELY AWAY FROM THE STRUCTURE. FOR PAVED AREAS, THE SLOPE GRADIENT CAN BE REDUCED TO 2 PERCENT.
   B. ALL SURFACE WATER SHOULD BE COLLECTED AND DISCHARGED INTO APPROVED DRAINAGE FACILITIES. APPROVED DRAINAGE FACILITIES SHALL BE PACIFIED BY THE THE CIVIL ENGINEER, IF APPLICABLE.
   C. ALL ROOF STORMWATER SHOULD BE COLLECTED AND DIRECTED TO DOWNSPOUTS. STORMWATER FROM ROOF DOWNSPOUTS SHOULD NOT BE ALLOWED TO DISCHARGE DIRECTLY ONTO THE GROUND SURFACE IN CLOSE PROXIMITY TO THE FOUNDATION SYSTEM. RATHER, STORMWATER FROM ROOF DOWNSPOUTS SHOULD BE DIRECTED BY AN IMPERMEABLE SURFACE INTO THE STREET OR TO AN APPROVED DRAINAGE FACILITY. IF THIS IS NOT ACCEPTABLE, WE RECOMMEND DOWNSPOUTS DISCHARGE AT LEAST 5 FEET AWAY FROM FOUNDATIONS.
5. OVER-OPTIMUM SOIL MOISTURE CONDITIONS:
   THE CONTRACTOR SHOULD ANTICIPATE ENCOUNTERING EXCESSIVELY OVER-OPTIMUM (WET) SOIL MOISTURE CONDITIONS DURING WINTER OR SPRING GRADING, OR DURING OR FOLLOWING PERIODS OF RAIN. IN ADDITION, WET SOIL CONDITIONS MAY BE ENCOUNTERED NEAR THE BOTTOM OF EXCAVATIONS. WET SOIL CAN MAKE PROPER COMPACTION DIFFICULT OR IMPOSSIBLE. WET SOIL CONDITIONS SHALL BE MITIGATED BY APPROVED MEANS.
6. OVER-OPTIMUM SOIL MOISTURE CONDITIONS:
   WHERE MOISTURE VAPOR TRANSMISSION IS A CONCERN, CONSULT A WATERPROOFING EXPERT. MOISTURE TRANSITION IS OUTSIDE THE SCOPE OF THESE PLANS.
   A. A TOUGH, WATER VAPOR RETARDING MEMBRANE SHOULD BE INSTALLED BELOW ALL SLAB FOUNDATIONS SYSTEMS TO REDUCE MOISTURE CONDENSATION UNDER FLOOR COVERINGS. THE VAPOR RETARDER SHOULD MEET ASTM E 1745 CLASS A REQUIREMENTS FOR WATER VAPOR PERMEANCE, TENSILE STRENGTH, AND PUNCTURE RESISTANCE. VAPOR TRANSMISSION THROUGH THE SLAB FOUNDATIONS CAN ALSO BE REDUCED BY USING HIGH STRENGTH CONCRETE WITH A LOW WATER-CEMENT RATIO.
7. DEEPEN PERIMETER FOOTINGS AS REQUIRED WHERE FOOTING, OR EDGE OF SLAB, IS WITHIN 3'-0" OF EDGE OF BIO-SWALE, BIO-RETENTION FACILITIES, TRENCHES, ETC. DEEPEN FOOTING SUCH THAT A 1:1 PLANE IS MAINTAINED BETWEEN BOTTOM OF FOOTING AND BOTTOM OF ADJACENT EXCAVATION. SEE DTL. 207/SD2 FOR MORE INFORMATION.
8. IT IS THE RESPONSIBILITY OF THE CONTRACTOR TO LOCATE AND PROTECT EXISTING UTILITIES TO REMAIN DURING AND/OR AFTER CONSTRUCTION.
9. CONTRACTOR TO REMOVE ABANDONED FOOTINGS, UTILITIES, ETC. WHICH INTERFERE WITH NEW CONSTRUCTION, UNLESS OTHERWISE INDICATED. NOTIFY THE OWNER'S REPRESENTATIVE IF ANY BURIED STRUCTURES NOT INDICATED, SUCH AS CESSPOOLS, CISTERNS, FOUNDATIONS, ETC., ARE FOUND.
10. THE CONTRACTOR IS SOLELY RESPONSIBLE FOR EXCAVATION PROCEDURES INCLUDING LAGGING, SHORING, UNDERPINNING AND PROTECTION OF EXISTING CONSTRUCTION.
11. PLACE BACKFILL BEHIND RETAINING WALLS AFTER CONCRETE OR MASONRY HAS ATTAINED FULL DESIGN STRENGTH. BRACE BUILDING AND PIT WALLS BELOW GRADE FROM LATERAL LOADS UNTIL ATTACHED FLOORS AND SLABS ON GRADE ARE COMPLETE AND HAVE ATTAINED FULL DESIGN STRENGTH.

SHEARWALL NOTES

1. WHERE A STRUCTURAL SHEARWALL IS INDICATED ON PLANS THE ASSEMBLY SHALL RUN HORIZONTALLY AND CONTINUOUSLY TO THE NEAREST WALL OPENING OR END OF THE WALL; THE ASSEMBLY SHALL RUN VERTICALLY CONTINUOUSLY FROM THE BOTTOM OF THE NEAREST SOLE OR BOTTOM PLATE UP TO THE TOP OF THE NEAREST DOUBLE TOP PLATE (OR BEAM). ALL PLYWOOD PANEL EDGES SHALL BE BLOCKED AND EDGE NAILED.
2. WHERE HOLDOWN POSTS OR STUDS ARE INDICATED AT THE END OF A SHEARWALL, THE SHEAR PLYWOOD SHALL BE EDGE NAILED AND THE POST SHALL RUN CONTINUOUSLY FROM THE SOLE PLATE TO THE DOUBLE TOP PLATE. HOLDOWNS SHALL BE ATTACHED TO POSTS AT THE ENDS OF SHEARWALLS AND SHALL EXTEND TO EITHER FRAMING BELOW OR TO FOUNDATION AS SHOWN ON PLANS.
3. SEE SHEARWALL SCHEDULE ON PLANS FOR REQUIRED SHEARWALL NAILING, ANCHOR BOLTS, SILL NAILS, AND OTHER SHEAR TRANSFER HARDWARE.
4. SHEARWALL PLYWOOD SHALL NOT BE CUT FOR PIPE, DUCTS, SLEEVES, ETC., U.N.O. OR DETAILED.
5. UNLESS OTHERWISE DETAILED, ALL INTERIOR SHEARWALLS SHALL BE CONTINUOUS TO THE ROOF OR FLOOR PLYWOOD IN ACCORDANCE WITH THE TYPICAL SHEAR TRANSFER DETAILS
6. PLYWOOD SHEETS LOCATED AT SHEARWALL EDGES SHALL BE AT LEAST 12" WIDE. PLYWOOD EDGES SHALL BE EDGE NAILED TO ALL SHEARWALL FRAMING MEMBERS. SEE SHEARWALL SCHEDULE FOR FIELD NAILING REQUIREMENTS.
7. SEE SHEARWALL SCHEDULE FOR SHEARWALLS THAT REQUIRE 3x MUDSILLS AND 3x FRAMING AT ADJOINING PLYWOOD PANEL EDGES. SILL PLATES, TOP PLATES AND MEMBERS IN THE FIELD OF INDIVIDUAL PLYWOOD PANELS DO NOT TYPICALLY BACK ADJOINING PANEL EDGES AND THUS MAY BE 2x.

OBSERVATION OF CONSTRUCTION

1. IN ADDITION TO OBSERVATIONS BY THE SOILS ENGINEER(IF APPLICABLE), AND CITY INSPECTOR, OBSERVATION OF THE CONSTRUCTION BY THE PROJECT ENGINEER IS RECOMMENDED FOR THIS PROJECT. THE CONTRACTOR SHALL PHASE THE PROJECT AND COORDINATE WITH THE ENGINEER TO ENSURE THAT THE PRIMARY STRUCTURAL ELEMENTS OF THE CONSTRUCTION ARE OBSERVED PRIOR TO COVERING WITH FINISHES OR OTHER MATERIALS. AS A MINIMUM, OBSERVATION BY THE ENGINEER IS RECOMMENDED AS FOLLOWS:
   A. REINF. STEEL AND HARDWARE EMBEDDED IN THE FNDTION SHALL BE OBSERVED PRIOR TO CONCRETE PLACEMENT
   B. SHEARWALLS AND FRAMING ELEMENTS SHALL BE OBSERVED PRIOR TO INSTALLATION OF FINISHES.
2. OBSERVATION OF THE CONSTRUCTION BY THE ENGINEER DOES NOT RELIEVE THE CONTRACTOR FROM RESPONSIBILITY TO COMPLETE THE CONSTRUCTION IN CONFORMANCE WITH THE PROJECT DOCUMENTS AND GENERALLY ACCEPTED STANDARDS OF PRACTICE. THE PURPOSE OF OUR VISITS WILL BE TO BECOME GENERALLY FAMILIAR WITH THE PROGRESS AND QUALITY OF THE CONTRACTOR'S WORK AND DETERMINE IF THE WORK IS PROGRESSING IN GENERAL CONFORMANCE WITH OUR DESIGN INTENT. DURING OUR VISITS, ADVANCED ENGINEERING WILL NOT BE MAKING DETAILED INSPECTIONS, OR VERIFYING DIMENSIONS. THE CONTRACTOR IS RESPONSIBLE FOR FOLLOWING APPLICABLE CODES AND THE APPROVED CONSTRUCTION DOCUMENTS.

SPECIAL INSPECTIONS PER 2022 CBC 1701

1. IN ADDITION TO OBSERVATIONS BY THE CITY INSPECTOR AND THE PROJECT ENGINEER, SPECIAL INSPECTIONS BY AN ICC CERTIFIED SPECIAL INSPECTOR IS REQUIRED AS FOLLOWS:
   A. EPOXY ANCHORS INSTALLED IN CONCRETE SHALL HAVE SPECIAL INSPECTION OF HOLE DEPTH & DIAMETER, MATERIALS, CLEANING PROCEDURES, AND INSTALLATION PER ICC-REPORT ICC-ES/ESR-2508 SECTION 4.4.3.
   B. TITEN HD ANCHORS INSTALLED IN CONCRETE SHALL HAVE SPECIAL INSPECTION OF DRILLING AND INSTALLATION PER ICC-REPORT ICC-ES/ESR-2713 SECTION 4.4.
   C. PERIODIC SPECIAL INSPECTION IS REQUIRED FOR NAILING, BOLTING, ANCHORING, AND OTHER FASTENING OF COMPONENTS WITHIN THE SEISMIC-FORCE-RESISTING SYSTEM, INCLUDING WOOD SHEAR WALLS, WOOD DIAPHRAGMS, DRAG STRUTS, BRACES, SHEAR PANELS AND HOLDOWNS PER SECTION 1705.12.2 OF THE CURRENT EDITION OF THE C.B.C.
   D. CONTINUOUS INSPECTIONS OF CAST-IN-PLACE DEEP FOUNDATION (PIERS) OR DRILLING OPERATIONS. COMPLETE AND ACCURATE RECORDS FOR EACH ELEMENT SHALL BE PROVIDED PER SECTION 1705.8 OF THE CURRENT EDITION OF THE C.B.C.
   E. CONTINUOUS INSPECTIONS OF CAST-IN-PLACE DEEP FOUNDATION (PIERS) TO VERIFY: PLACEMENT LOCATIONS AND PLUMBNESS, CONFIRM ELEMENT DIAMETERS, LENGTHS, AND EMBEDMENTS PER SECTION 1705.8 OF THE CURRENT EDITION OF THE C.B.C.
2. THE CONTRACTOR SHALL COORDINATE WITH THE CITY TO ENSURE SPECIAL INSPECTION IS PROVIDED PER CITY REQUIREMENTS. THE SPECIAL INSPECTOR SHALL BE EMPLOYED BY THE OWNER AND MUST DEMONSTRATE HIS QUALIFICATIONS TO THE ARCHITECT/ENGINEER OF RECORD AND THE BUILDING OFFICIAL.

FASTENING SCHEDULE (C.B.C. TABLE 2304.10.2) △1

ITEM	DESCRIPTION OF CONNECTION	FASTENING (NOTE 1, 4, 8)		
		COMMON / BOX	SMOOTH SHANK	STAPLES
1	JOIST TO SILL OR GIRDER, TOE-NAIL	(3) 8d	(3) 3" x 0.131"	(3) 3"-14 GA.
2	BRIDGING TO JOIST, TOE-NAIL EA. END	(2) 8d	(2) 3" x 0.131"	(2) 3"-14 GA.
3	1" x 6" SUBFLOOR OR LESS, TO EACH JOIST, FACE NAIL	(2) 8d	N.A.	N.A.
4	WIDER THAN 1" x 6" SUBFLOOR TO EACH JOIST, FACE NAIL	(3) 8d	N.A.	N.A.
5	2" SUBFLOOR TO JOIST OR GIRDER, BLIND AND FACE NAIL	(2) 16d	N.A.	N.A.
6	SOLE PLATE TO JOIST OR BLOCKING, TYPICAL FACE NAIL	16d AT 16"	3" x 0.131" AT 8" O.C.	3"-14 GA. AT 12" O.C.
	SOLE PLATE TO JOIST OR BLOCKING, AT BRACED WALL PANELS	(3) 16d AT 16"	(4) 3" x 0.131" AT 16" O.C.	(4) 3"-14 GA. PER 16" O.C.
7	TOP PLATE TO STUD, END NAIL	(2) 16d	(3) 3" x 0.131"	(3) 3"-14 GA.
8	STUD TO SOLE PLATE, END NAIL	(2) 16d	(3) 3" x 0.131"	(3) 3"-14 GA.
	STUD TO SOLE PLATE, TOE-NAIL	(4) 8d	(4) 3" x 0.131"	(3) 3"-14 GA.
9	DOUBLE STUDS, FACE NAIL	16d AT 24"	3" x 0.131" AT 8" O.C.	3"-14 GA. AT 8" O.C.
10	DOUBLED TOP PLATES, TYP. FACE NAIL	16d AT 16"	3" x 0.131" AT 12" O.C.	3"-14 GA. AT 12" O.C.
	DOUBLE TOP PLATES, LAP SPLICE	(8) 16d	(12) 3" x 0.131"	(12) 3"-14 GA.
11	BLOCKING BETWEEN JOISTS OR RAFTERS, TO TOP PLATE, TOE-NAIL	(3) 8d	(3) 3" x 0.131"	(3) 3"-14 GA.
12	RIM JOIST TO TOP PLATE, TOE-NAIL	8d AT 6"	3" x 0.131" AT 6" O.C.	3"-14 GA. AT 6" O.C.
13	TOP PLATES, LAPS AND INTERSECTIONS, FACE NAIL	(2) 16d	(3) 3" x 0.131"	(3) 3"-14 GA.
14	CONTINUOUS HEADER, TWO PIECES	16d AT 16" ALONG EDGE	N.A.	N.A.
15	CEILING JOIST TO PLATE, TOE-NAIL	(3) 8d	(5) 3" x 0.131"	(5) 3"-14 GA.
16	CONTINUOUS HEADER TO STUD, TOE-NAIL	(4) 8d	N.A.	N.A.
17	CEILING JOISTS: LAPS OVER PARTITIONS, FACE NAIL *(SEE C.B.C. TABLE 2308.10.4.1)*	(3) 16d MIN.	(4) 3" x 0.131"	(4) 3"-14 GA.
18	CEILING JOISTS TO PARALLEL RAFTERS, FACE NAIL *(SEE C.B.C. TABLE 2308.10.4.1)*	(3) 16d MIN.	(4) 3" x 0.131"	(4) 3"-14 GA.
19	RAFTER TO PLATE, TOE-NAIL *(SEE C.B.C. TABLE 2308.10.1)*	(3) 8d	(3) 3" x 0.131"	(3) 3"-14 GA.
20	1" DIAGONAL BRACE TO EACH STUD AND PLATE, FACE NAIL	(2) 8d	(2) 3" x 0.131"	(3) 3"-14 GA.
21	1" x 8" SHEATHING OR LESS TO EACH BEARING, FACE NAIL	(3) 8d	N.A.	N.A.
22	WIDER THAN 1" x 8" SHEATHING TO EACH BEARING, FACE NAIL	(3) 8d	N.A.	N.A.
23	BUILT-UP CORNER STUDS	16d AT 24"	3" x 0.131" AT 16" O.C.	3"-14 GA. AT 16" O.C.
24	BUILT-UP GIRDERS AND BEAMS, FACE NAIL TOP AND BTM STAGG. ON OPP. SIDE	20d AT 32"	3" x 0.131" AT 24" O.C.	3"-14 GA. AT 24" O.C.
	BUILT-UP GIRDERS AND BEAMS, FACE NAIL AT ENDS AND AT EACH SPLICE	(2) 20d	(3) 3" x 0.131"	(3) 3"-14 GA.
25	2" PLANK TO EACH BEARING	16d	N.A.	N.A.
26	COLLAR TIE TO RAFTER, FACE NAIL	(3) 10d	(4) 3" x 0.131"	(4) 3"-14 GA.
27	JACK RAFTER TO HIP, TOE-NAIL	(3) 10d	(4) 3" x 0.131"	(4) 3"-14 GA.
	JACK RAFTER TO HIP, FACE NAIL	(2) 16d	(3) 3" x 0.131"	(3) 3"-14 GA.
28	ROOF RAFTER TO 2x RIDGE BEAM, TOE-NAIL OR FACE-NAIL	(2) 16d	(3) 3" x 0.131"	(3) 3"-14 GA.
29	JOIST TO BAND JOIST, FACE NAIL	(3) 16d	(4) 3" x 0.131"	(4) 3"-14 GA.
30	LEDGER STRIP, FACE NAIL	(3) 16d	(4) 3" x 0.131"	(4) 3"-14 GA.
31	WOOD STRUCTURAL PANELS AND PARTICLE BOARD (NOTE 2): SUBFLOOR, ROOF + WALL SHEATHING TO FRAMING:			
	1/2" AND LESS	6d (NOTE 3, 7)	2.375" x 0.113" (NOTE 9)	1.75" x 16 GA. (NOTE 10)
	19/32" TO 3/4"	8d (NOTE 4) 6d (NOTE 5)	2.375" x 0.113" (NOTE 11)	2" x 16 GA. (NOTE 11)
	7/8" TO 1"	8d (NOTE 3)	N.A.	N.A.
	1-1/8" TO 1-1/4"	10d OR 8d (NOTE 4)	N.A.	N.A.
	SINGLE FLOOR (COMBINATION SUBFLOOR-UNDERLAYMENT TO FRAMING):			
	3/4" AND LESS	6d (NOTE 5)	N.A.	N.A.
	7/8" TO 1"	8d (NOTE 5)	N.A.	N.A.
	1-1/8" TO 1-1/4"	10d (NOTE 4) 8d (NOTE 5)	N.A.	N.A.
32	PANEL SIDING TO FRAMING (NOTE 2):			
	1/2" AND LESS	6d (NOTE 6)	N.A.	N.A.
	5/8"	8d (NOTE 6)	N.A.	N.A.

NOTES: FOR SI: 1 inch = 25.4 mm

1. COMMON OR BOX NAILS ARE PERMITTED TO BE USED EXCEPT WHERE OTHERWISE STATED.
2. NAILS SPACED AT 6" O.C. AT EDGES, 12" O.C. AT INTERMEDIATE SUPPORTS EXCEPT 6" O.C. AT ALL SUPPORTS WHERE SPANS ARE 4'-0" OR MORE. NAILING OF WOOD STRUCTURAL PANEL AND PARTICLEBOARD DIAPHRAGMS AND SHEAR-WALLS, REFER TO C.B.C. SECTION 2305. WALL SHEATHING NAILS ARE PERMITTED TO BE COMMON, BOX OR CASING.
3. COMMON OR DEFORMED SHANK (6d - 2" x 0.113"; 8d - 2.5" x 0.131"; 10d - 3" x 0.148")
4. COMMON (6d - 2" x 0.113"; 8d - 2.5" x 0.131"; 10d - 3" x 0.148"; 16d - 3.5" x 0.162")
5. DEFORMED SHANK (6d - 2" x 0.113"; 8d - 2.5" x 0.131"; 10d - 3" x 0.148")
6. CORROSION-RESISTANT SIDING (6d - 1.875" x 0.106"; 8d - 2.375" x 0.128") OR CASING (6d - 2" x 0.099"; 8d - 2.5" x 0.113") NAILS.
7. FOR ROOF SHEATHING APPLICATIONS, 8d NAILS (2.5" x 0.113") ARE THE MINIMUM REQUIRED FOR WOOD STRUCTURAL PANELS.
8 STAPLES SHALL HAVE A MINIMUM CROWN WIDTH OF 7/16".
9. FOR ROOF SHEATHING APPLICATIONS, FASTENERS SPACED 4" O.C. AT EDGES AND 8" O.C. AT INTERMEDIATE SUPPORTS.
10. FASTENERS SPACED 4" O.C. AT EDGES AND 8" O.C. AT INTERMEDIATE SUPPORTS FOR SUBFLOOR AND WALL SHEATHING AND 3" O.C. AT EDGES AND 6" O.C. AT INTERMEDIATE SUPPORTS FOR ROOF SHEATHING.
11. FASTENERS SPACED 4" O.C. AT EDGES AND 8" O.C. AT INTERMEDIATE SUPPORTS.

NAIL SCHEDULE

FASTENER PER PLAN	SHANK DIA.	HEAD DIA.	MIN. LENGTH
8d	0.131"	0.281"	2-1/2"
10d	0.148"	0.312"	3"
16d	0.148"	0.344"	3-1/4"
16d COMMON	0.162"	0.344"	3-1/2"
20d	0.192"	0.406"	4"

NOTES:

1. ALL NAILS IN MANUF. HARDWARE SHALL BE PER MANUFACTURERS SPECIFICATIONS AS NOTED TO ACHIEVE MAX HARDWARE VALUE.
2. FASTENERS, INCLUDING NUTS AND WASHERS, IN CONTACT WITH SODIUM BORATE SBX/DOT PRESERVATIVE-TREATED WOOD IN AN INT., DRY ENVIRONMENT SHALL BE PERMITTED.
3. FASTENERS IN CONTACT WITH PRESERVATIVE -TREATED TREATED WOOD USING ALKALINE COPPER QUAT (ACQ-C, ACQ-D, ACQ-D CARBONATE), COPPER AZOLE (CA-B & CA-C, MCA-C) OR EXPOSED TO WEATHER SHALL BE HOT DIPPED GALV. OR STAINLESS STEEL

ABBREVIATION LEGEND

@	AT	EXT.	EXTERIOR	OPNG	OPENING
A.B.	ANCHOR BOLT	FDN	FOUNDATION	O.S.B.	ORIENTED STRAND BOARD
ABV	ABOVE	F.F.	FINISH FLOOR	O.W.S.J.	OPEN WEB STEEL JOIST
ACI	AMERICAN CONCRETE INSTITUTE	FIN.	FINISH	O.W.J.G.	OPEN WEB JOIST GIRDER
ADD'L	ADDITIONAL	F.J.	FLOOR JOIST	P.A.	POST ABOVE
A.F.F.	ABOVE FINISHED FLOOR	FLG	FLANGE	P.A.F.	POWDER-ACTUATED FASTENER
AGGREG.	AGGREGATE	FLR	FLOOR	P.C.F.	POUNDS PER CUBIC FOOT
AISC	AMERICAN INSTITUTE OF STEEL CONSTRUCTION	F.O.B.	FACE OF BLOCK	PEN.	PENETRATION
		F.N.	FACE NAIL	PERF.	PERFORATED
AITC	AMERICAN INSTITUTE OF TIMBER CONSTRUCTION	F.O.C.	FACE OF CONCRETE	PERP.	PERPENDICULAR
		F.O.M.	FACE OF MASONRY	PL.	PLATE
ALT.	ALTERNATE	F.O.S.	FACE OF STUD	PLY.	PLYWOOD
ARCH.	ARCHITECT(URAL)	F.P.	FIREPLACE - OR - FULL PENETRATION	PLYWD	PLYWOOD
ASTM	AMERICAN SOCIETY FOR TESTING & MATERIALS	FRMD	FRAMED	PR	PAIR
		FRMG	FRAMING	P.S.F.	POUNDS PER SQUARE FOOT
B/	BOTTOM OF	F.S.	FAR SIDE	P.S.I.	POUNDS PER SQUARE INCH
B.C.	BOTTOM CHORD	FT	FOOT	P.S.L.	PARALLEL-STRAND LUMBER
BLDG	BUILDING	FTG	FOOTING	PST	POST
BLK	BLOCK	G & N	GLUE AND NAIL	PT	POINT
BLKG	BLOCKING	GA.	GAGE	P.T.	PRESSURE TREATED - OR - POST-TENSION
BLW	BELOW	GALV.	GALVANIZED		
BM	BEAM	G.B.	GRADE BEAM	R	RADIUS
B.N.	BOUNDARY NAILING	GEN.	GENERAL	RECM'D	RECOMMEND(ATION)
B.O.	BY OTHERS - OR - BOTTOM OF	GLB	GLUED-LAMINATED BEAM	REF.	REFERENCE
		GR.	GRADE	REINF.	REINFORCED - OR - REINFORCING - OR - REINFORCEMENT
B.O.C.	BOTTOM OF CONCRETE	G.T.	GIRDER TRUSS		
B.O.F.	BOTTOM OF FOOTING	GYP.	GYPSUM		
B.O.S.	BOTTOM OF STEEL	G.W.B.	GYPSUM WALL BOARD	REQD	REQUIRED
BRG	BEARING	HD	HOLDOWN	RET.	RETAINING
B.S.	BOTH SIDES	H.D.G.	HOT-DIP GALVANIZED	RETAIN.	RETAINING
BTM	BOTTOM	HDR	HEADER	R.J.	ROOF JOIST
BTWN	BETWEEN	HGR	HANGER	R.O.	ROUGH OPENING
CALCS	CALCULATIONS	H.H.N.	HEAVY HEX NUT	R.P.	"REAL POST"
CANT.	CANTILEVER	H.N.	HEX NUT	R.R.	ROOF RAFTER
C.B.	CEILING BEAM	HORIZ.	HORIZONTAL	R/S	RESAWN (ROUGH-SAWN)
C.B.C.	CALIFORNIA BUILDING CODE	H.S.B.	HIGH STRENGTH BOLT	R.T.	ROOF TRUSS
		HSS	STRUCTURAL TUBE	R.W.	RETAINING WALL
C.C.	CENTER TO CENTER	HT	HEIGHT	RWD	REDWOOD
C.C.J.	CRACK CONTROL JOINT	I.D.	INSIDE DIAMETER	S.A.D.	SEE ARCHITECTURAL DRAWINGS
C.F.	CUBIC FOOT	INFO.	INFORMATION		
C.J.	CONTROL JOINT - OR - CEILING JOIST	INT.	INTERIOR	S.B.	SOLID BLOCK
		INV.	INVERT(ED)	S.B.T.	SET-BACK TRUSS
℄	CENTERLINE	JNT	JOINT	SCHED.	SCHEDULE
CLG	CEILING	JST	JOIST	SEP.	SEPARATION
CLR	CLEAR	J.T.	JACK TRUSS	S.G.T.	SUB-GIRDER TRUSS
C.M.U.	CONCRETE MASONRY UNIT	K	KIPS	SHT	SHEET
COL.	COLUMN	K.D.	KILN-DRIED	SIM.	SIMILAR
COLL.	COLLECTOR	KLF	KIPS PER LINEAL FOOT	S.M.S.	SHEET METAL SCREW
CONC.	CONCRETE	K.P.	KING POST	S.J.	SOFFIT JOIST
COND.	CONDITION	lbs	POUNDS	SPEC.	SPECIFICATION
CONN.	CONNECTION	L.B.	LAG BOLT	SQ.	SQUARE
CONSTR.	CONSTRUCTION	L.F.	LINEAL FOOT	S.S.	SELECT STRUCTURAL
CONT.	CONTINUOUS

GENERAL FRAMING NOTES

1. NO STRUCTURAL MEMBER SHALL BE CUT OR NOTCHED UNLESS SPECIFICALLY SHOWN, NOTED, OR APPROVED BY THE ENGINEER. NOTCH DETAILS, IF PROVIDED, ARE FOR GENERAL GUIDANCE ONLY. THE ENGINEER SHALL BE CONTACTED TO APPROVE LOCATIONS OF PROPOSED NOTCHES. STUDS IN EXTERIOR WALLS AND BEARING PARTITIONS MAY BE CUT OR NOTCHED TO A DEPTH NOT EXCEEDING 25% OF STUD WIDTH. CUTTING OR NOTCHING OF STUDS IN NON-BEARING PARTITIONS SHALL NOT EXCEED 40% OF THE WIDTH. SEE DETAIL 404/SD4 FOR MORE INFORMATION.

2. **TYPICAL FRAMING AND STRUCTURAL MATERIALS:**
ALL FRAMING LUMBER SHALL BE DOUGLAS FIR, AND SHALL BE STAMPED WITH A GRADE MARK WITH THE FOLLOWING GRADES. FRAMING LUMBER SHALL CONFORM TO GRADING RULES OF WWPA AND COMPLIES WITH DOC PS 20.
MAXIMUM MOISTURE CONTENT SHALL NOT EXCEED 19% AT THE TIME OF CONSTRUCTION.

FRAMING MATERIAL	GRADE
TYPICAL WALL STUDS	PER NOTE 6 BELOW
SOLE PLATES (2x MIN.) [1]	STUD GRADE, MINIMUM
MUDSILLS (2x MIN.) [2]	P.T. DF. STD & BETTER
TOP PLATES (2x MIN.)	D.F. #2, MIN. U.N.O.
RIM JOIST (2x DIMENSIONAL)	D.F. #2, MIN. U.N.O.
FLR JOISTS (2x DIMENSIONAL)	D.F. #2, MIN. U.N.O.

FRAMING MATERIAL	GRADE
RAFTERS (2x DIMENSIONAL)	D.F. #2, MIN. U.N.O.
BUILT UP HEADERS (2-2x)	D.F. #2, MIN. U.N.O.
4x POSTS/BEAMS/RAFTERS	D.F. #2, MIN. U.N.O.
6x POSTS/BEAMS/RAFTERS	D.F. #1, MIN. U.N.O.
STRUCTURAL PLYWOOD	APA RATED SHTG
LUMBER EXPOSED TO WEATHER [3]	P.T. D.F. #2 U.N.O.

1. SOLE PLATES, AS NOTED ABOVE, ARE ALL INTERIOR SILL PLATES NOT IN CONTACT WITH CONCRETE. MATERIAL SHALL BE UC1 INTERIOR/DRY CATEGORY AS DEFINED BY AWPA STANDARD U1.
2. MUDSILLS, AS NOTED ABOVE, ARE ALL INTERIOR SILL PLATES IN DIRECT CONTACT WITH CONCRETE. MATERIAL SHALL BE UC2 INTERIOR/DAMP CATEGORY AS DEFINED BY AWPA STANDARD U1.
3. LUMBER EXPOSED TO WEATHER, AS NOTED ABOVE, IS ALL EXTERIOR LUMBER ABOVE GROUND AND EXPOSED TO WEATHER. MATERIAL SHALL BE UC3B ABOVE GROUND EXPOSED CATEGORY AS DEFINED BY AWPA STANDARD U1.

3. **PRESERVATIVE TREATED OR NATURALLY DURABLE MATERIALS:**
LUMBER SHALL BE TREATED WITH TYPICAL WATERBORNE PRESERVATIVES: ALKALINE COPPER QUAT (ACQ-C, ACQ-D, ACQ-D CARBONATE), COPPER AZOLE (CA-B & CA-C, MCA-C) AND SODIUM BORATES (SBX/DOT). THESE TREATMENTS ARE OFTEN REFERRED TO BY TRADE NAMES SUCH AS: WOLMANIZED NATURAL SELECT™ (COPPER AZOLE), PRESERVE AND NATUREWOOD® (ACQ), MICROPRO™, SMART SENSE™ (MCQ), AND ADVANCE GUARD® (BORATE).

A. ALL INTERIOR/DAMP CONSTRUCTION, UC2 CATEGORY, SHALL BE TREATED WITH SODIUM BORATE SBX/DOT.
   1. PLAIN CARBON STEEL FASTENERS, INCLUDING NUTS AND WASHERS, IN CONTACT WITH SODIUM BORATE SBX/DOT PRESERVATIVE-TREATED WOOD IN AN INTERIOR, DRY ENVIRONMENT SHALL BE PERMITTED.

B. ALL EXTERIOR ABOVE GROUND CONSTRUCTION (INCL. DECK FRAMING), UC3B CATEGORY, SHALL BE TREATED WITH ALKALINE COPPER QUAT (ACQ-C, ACQ-D, ACQ-D CARBONATE), OR COPPER AZOLE (CA-B & CA-C, MCA-C)
   1. ALL FASTENERS AND CONNECTORS IN CONTACT WITH PRESERVATIVE-TREATED TREATED WOOD USING ALKALINE COPPER QUAT (ACQ-C, ACQ-D, ACQ-D CARBONATE), OR COPPER AZOLE (CA-B & CA-C, MCA-C) SHALL BE HOT DIPPED GALVANIZED OR STAINLESS STEEL IN ACCORDANCE WITH GOVERNING CBC SEC. 2304.10 AND SHALL BE IN ACCORDANCE WITH ASTM A 153.

C. WOOD JOISTS OR WOOD STRUCTURAL FLOORS THAT ARE CLOSER THAN 18 INCHES OR WOOD GIRDERS THAT ARE CLOSER THAN 12 INCHES TO EXPOSED GROUND IN CRAWL SPACES OR UNEXCAVATED AREAS LOCATED WITHIN THE PERIMETER OF THE BUILDING FOUNDATION SHALL BE PRESERVATIVE-TREATED WOOD IN ACCORDANCE CBC.

4. **GLUE-LAMINATED STRUCTURAL MATERIALS:**
STANDARD SPECIFICATIONS FOR GLUE-LAMINATED STRUCTURAL MEMBERS, ANSI/AITC A 190.1 AND ASTM D3737. GLUE-LAMINATED BEAMS SHALL BE INSPECTED AND A CERTIFICATE PROVIDED TO THE FILED INSPECTOR AT THE TIME OF FRAMING INSPECTION. FABRICATION SHALL BE PERFORMED IN ACCORDANCE WITH CBC 1705.5. ALL GLUE-LAMINATED BEAMS THAT ARE CONTINUOUS OVER SUPPORTS OR CANTILEVERED SHALL HAVE TENSION LAMINATIONS ON TOP OF BEAMS.
MAXIMUM MOISTURE CONTENT SHALL NOT EXCEED 16% AT THE TIME OF CONSTRUCTION.

A. GLULAM MEMBERS IN DRY SERVICE USE SHALL BE DOUGLAS-FIR 24F-V4 (SINGLE SPAN) OR COMBINATION 24F-V8 (MULTI-SPAN & CANTILEVER) U.N.O. BEAMS SHALL BE ARCHITECTURAL GRADE WHEN EXPOSED TO VIEW, S.A.D.
   1. GLULAM MEMBERS, SEE PLAN SPECIFICATIONS FOR CAMBER WHERE OCCURS.

MATERIAL GRADE	E ($x10^6$ psi)	Fb (psi)	Fv (psi)	Fc (psi)	RADIUS, U.N.O.
DF/DF 24F-V4	1.8	2400	265	650	3500' RADIUS
DF/DF 24F-V8	1.8	2400	265	650	NO CAMBER

B. GLULAM MEMBERS IN WET SERVICE USE SHALL BE ALASKAN CEDAR 20F-V12 (SINGLE SPAN) OR COMBINATION 20F-V13 (MULTI-SPAN & CANTILEVER) U.N.O.
   1. GLULAM MEMBERS, SEE PLAN SPECIFICATIONS FOR CAMBER WHERE OCCURS.

MATERIAL GRADE	E ($x10^6$ psi)	Fb (psi)	Fv (psi)	Fc (psi)	RADIUS, U.N.O.
AC/AC 20F-V12	1.5	2000	265	560	3500' RADIUS
AC/AC 20F-V13	1.5	2000	265	560	NO CAMBER

C. DESIGN, FABRICATION AND CONSTRUCTION OF STRUCTURAL GLULAM MEMBERS SHALL CONFORM TO THE AMERICAN INSTITUTE OF TIMBER CONSTRUCTION STANDARD, MANUAL No. 301 AND THE COMMERCIAL STANDARD FOR STRUCTURAL GLUED LAMINATED TIMBER, CS 253.

D. STRUCTURAL PLYWOOD SHALL BE GRADED PER APA PSI-83AND SHALL BE INTERIOR TYPE SHEATHING C-D GRADE WITH EXTERIOR GLUE. EQUIVALENT O.S.B. WOOD STRUCTURAL PANEL MAY BE USED AS AN ALTERNATE TO PLYWOOD. HOWEVER, IN ACCORDANCE WITH THE TILE COUNCIL OF AMERICA RECOMMENDATIONS, O.S.B. SHALL NOT BE USED BELOW TILE MORTAR. ALL HORIZONTAL PLYWOOD SHALL BE LAID WITH FACE GRAIN PERPENDICULAR TO FRAMING MEMBERS, WITH STAGGERED JOINTS.

5. **STRUCTURAL COMPOSITE LUMBER (SCL) MATERIALS:**
ALL STRUCTURAL COMPOSITE LUMBER (SCL) SHALL BE MANUFACTURED PER ASTM D5055 AND ASTM D5456. STRUCTURAL COMPOSITE LUMBER SHALL BE MANUFACTURED BY BOISE CASCADE, OR EQUAL. ALTERNATE MANUFACTURERS ARE PERMITTED AND CONSIDERED AN EQUIVALENT SUBSTITUTION IF THE SUBSTITUTED MATERIAL MEETS, OR EXCEEDS, ALL THE DESIGN PROPERTIES LISTED BELOW.

SPECIFICATION	MATERIAL	WIDTH (in.) [2]	E ($x10^6$ psi)	Fb (psi)	Fv (psi)	$Fc_{\perp}$(psi)	$Fc_{\parallel}$(psi)
RIM JOIST	VERSA-STRAND LVL	1-5/16	1.4	1800	225	525	2500
LVL COLUMN	VERSA-LAM LVL	3.5, 5.25, 7	1.7	2650	285	750	3000
LVL STUD	VERSA-STUD LVL	1.5	1.7	2617	285	450	3000
LVL BEAM	VERSA-LAM 2.0E	1.75	2.0	2800	285	750	3000
LVL BEAM	VERSA-LAM 2.0E	3.5, 5.25, 7	2.0	3100	285	750	3000

1. BEAM DEPTH IS ASSUMED TO MATCH FLOOR FRAMING DEPTH U.N.O.
2. MFR BEAM MEMBERS MAY BE BUILT UP TO ACHIEVE SPECIFIED WIDTHS PER DETAIL 609/SD6 U.N.O. ON PLANS.

6. ALL STUD WALLS SHOWN ON STRUCTURAL DRAWINGS SHALL BE FRAMED AS FOLLOWS (U.O.N.):

EXTERIOR WALL STUD HEIGHT TABLE (L/360 DEFL.)

MAX. PLATE HT	STUD TYPE	SPACING
21'-5"	(2) 2x6 DOUG-FIR #1	12" O.C.
19'-5"	(2)-2x6 DOUG-FIR #1	16" O.C.
15'-1"	2x6 DOUG-FIR #2	16" O.C.
12'-1"	(2)-2x4 DOUG-FIR #1	16" O.C.
	2x6 STUD GRADE	16" O.C.
10'-1"	2x4 DOUG-FIR #1	16" O.C.
	2x6 STUD GRADE	16" O.C.
9'-1"	2x4 DOUG-FIR #2	16" O.C.
	2x6 STUD GRADE	16" O.C.
8'-1"	2x4 STUD GRADE	16" O.C.
	2x6 STUD GRADE	16" O.C.

INTERIOR WALL STUD HEIGHT TABLE (L/240 DEFL.)

MAX. PLATE HT	STUD TYPE	SPACING
21'-5"	2x6 STUD GRADE	12" O.C.
19'-5"	2x6 STUD GRADE	16" O.C.
15'-1"	2x6 STUD GRADE	16" O.C.
12'-1"	2x4 STUD GRADE	16" O.C.
	2x6 STUD GRADE	16" O.C.

NOTE:
A. STUD HEIGHTS EXCEEDING 10'-1" SHALL BE BRACED MID-HEIGHT USING FULL DEPTH 2x BLOCKING.

7. TOP PLATES SHALL BE DOUBLED ON ALL STUD WALLS. LAP 4'-0" MINIMUM AT TOP PLATE SPLICES, WITH (12) 16d NAILS EACH SIDE OF SPLICE, U.N.O. SPLICES IN UPPER AND LOWER PLATES SHALL BE STAGGERED 4'-0" MINIMUM.

8. POSTS IN WALLS MAY BE MADE WITH MULTIPLE STUDS OF EQUIVALENT WIDTH AND DEPTH, U.O.N. SECURE MULTIPLE STUDS WITH 16d NAILS AT 8" O.C. STAGGERED.

9. PROVIDE KING STUDS AT THE ENDS OF ALL HEADERS OR OTHER BEAMS INSTALLED IN WALLS, SEE DETAIL 401/SD4 ADJACENT, STACKING WINDOWS SHALL BE SEPARATED BY KING STUDS THAT ARE CONTINUOUS FROM SILL TO TOP PLATE, CRIPPLE STUDS UNDER HEADERS SHALL BE CONTINUOUS TO SILL PLATE. END NAIL KING STUDS TO HEADERS.

10. ALL MEMBERS IN BEARING SHALL BE ACCURATELY CUT AND ALIGNED SO THAT FULL BEARING IS PROVIDED WITHOUT THE USE OF SHIMS.

11. BLOCK ALL STUD WALLS AS REQUIRED FOR SHEATHING AND FINISHES. BALLOON FRAME ALL WALLS WITH SLOPING CEILING OR WITH RAISED CEILINGS.

12. INSTALL HORIZONTAL MEMBERS WITH CROWN UP. WHERE KNOTS EXIST NEAR THE TOP OR BOTTOM OF HORIZONTAL MEMBERS, INSTALL MEMBER WITH KNOTS UP. CANTILEVERED DECK JOISTS SHALL BE CAREFULLY NOTCHED AND TRIMMED (IF NECESSARY) TO PROVIDE SLOPE WITHOUT OVER-CUTTING.

13. PROVIDE FULL DEPTH BLOCKING OR CONTINUOUS RIM JOIST AT ALL FLOOR AND ROOF FRAMING SUPPORTS. FRAMING MEMBERS SHALL HAVE A MINIMUM OF 2" BEARING AT SUPPORTS. LAPPING JOISTS SHALL HAVE 6" MINIMUM OVERLAP CENTERED OVER INTERIOR SUPPORTS.

14. ALL BOLTED WOOD CONNECTIONS SHALL HAVE A WASHER UNLESS A STEEL PLATE IS SPECIFIED. HOLES SHALL BE PROPERLY ALIGNED. OVERSIZED HOLES ARE NOT ALLOWED. NUTS SHALL BE SNUG TIGHTENED. BOLT HOLES SHALL BE NOMINAL DIAMETER OF BOLT PLUS 1/16".

15. NAILED WOOD CONNECTIONS SHALL USE COMMON WIRE NAILS, U.N.O. MIN. NAILING REQUIREMENTS FOR STANDARD CONNECTIONS SHALL BE IN ACCORDANCE WITH THE GOVERNING C.B.C. FASTENING SCHEDULE (TABLE 2304.10.1).

16. ALL MANUFACTURED CONNECTION HARDWARE SHALL BE AS DESIGNATED ON DRAWINGS AND INSTALLED (WITH ALL NAIL HOLES FILLED) IN ACCORDANCE WITH MANUFACTURER'S INSTRUCTIONS AND APPLICABLE ICC APPROVALS.

17. INSTALL LAG SCREWS IN DRILLED LEAD HOLES WITH A DIA. EQUAL TO 3/4" OF THE SHANK DIAMETER. LAG SCREWS SHALL NOT BE HAMMERED IN. PROVIDE WASHERS UNDER HEADS BEARING ON WOOD. HOLES SHALL BE PROPERLY ALIGNED.

CONCRETE NOTES

CONCRETE WORK SHALL CONFORM TO THE REQUIREMENTS OF THE 2022 BUILDING CODE (C.B.C.) AND THE LATEST EDITION OF THE ACI318-14, UNLESS NOTED OTHERWISE.

1. CONCRETE REQUIREMENTS: BASED ON NORMAL WEIGHT CONCRETE (UNIT WEIGHT OF 145 TO 150 pcf).

	MINIMUM COMPRESSIVE STRENGTH (psi) (AT 28 DAYS)	SLUMP (+/- 1/2")	AGGREG. SIZE	SPEC. INSP. REQD	MAXIMUM WATER TO CEMENT RATIO (NOTE 1F)	CEMENT TYPE ASTM C150
GRADE BEAMS & STEM WALLS	3000	4"	3/4"	NO **	.55	II OR V
CONCRETE PIERS	3000	4"	3/4"	NO **	.55	II OR V
FOOTINGS ON GRADE	3000	4"	1"	NO **	.55	II OR V
FLOOR SLABS ON GRADE	3000	4"	1"	NO **	.45	II OR V

** **SPECIAL INSPECTION IS NOT REQUIRED, DESIGN COMPRESSIVE STRENGTH IS 2500 psi, HIGHER STRENGTHS HAVE BEEN SPECIFIED FOR QUALITY CONTROL.**

A. COARSE AGGREGATE SHALL BE HARD, DURABLE CRUSHED STONE OR GRAVEL GRADED PER ASTM C33. MAXIMUM SIZE OF AGGREGATE SHALL BE AS NOTED IN SCHEDULE ABOVE AND DEFINED BELOW. SAND SHALL BE CLEAN, HARD, DURABLE, WASHED FREE FROM SILT, LOAM OR CLAY.
   1. GRADE BEAMS, STEM WALLS, RETAINING WALLS AND OTHER CONCRETE FRAMEWORK LESS THAN 10" WIDE SHALL USE 3/4" AGGREGATE CONFORMING TO ASTM C33 WITH 100% PASSING 1" SIEVE AND 90% (MINIMUM) PASSING 3/4" SIEVE. TO ENSURE PROPER CONCRETE COVER AND CONSOLIDATION.
   2. FOOTING AND SLABS ON GRADE, INCLUDING POST-TENSION AND MAT SLABS, SHALL USE 1" AGGREGATE CONFORMING TO ASTM C33 WITH 95% (MINIMUM) PASSING 1" SIEVE.

B. MIXING WATER SHALL BE CLEAN AND FREE FROM INJURIOUS AMOUNTS OF OIL, ACIDS, ALKALIES, ORGANIC MATERIALS OR OTHER DELETERIOUS SUBSTANCES.
C. CONCRETE EXPOSED TO SULFATE SHALL USE TYPE V CEMENT WITH POZZOLAN.
D. FLY ASH OR POZZOLANS, IF USED, SHALL CONFORM WITH ASTM C618, COAL FLY ASH AND RAW OR CALCINED NATURAL POLZZLAN FOR USE AS A MINERAL ADMIXTURE IN CONCRETE. USAGE SHALL NOT EXCEED 25 PERCENT, BY WEIGHT OF THE TOTAL CEMENTITOUS MATERIALS. WHEN POZZOLANS ARE USED TO MITIGATE THE EFFECT OF SULFATE CONTAINING SOILS THEY SHALL BE OF A TYPE THAT HAS DEMONSTRATED SUCH ABILITY BY TEST OR SERVICE RECORD.
E. ADMIXTURES CONTAINING CALCIUM CHLORIDE SHALL NOT BE USED.
F. CEMENT SHALL CONFORM WITH ASTM C150 & C 595, PORTLAND CEMENT AND BLENDED HYDRAULIC CEMENTS
G. TRANSIT MIX SHALL BE PER ASTM C-94.
H. MIX DESIGN SHALL MEET THE RECOMMENDED SPECIFICATION UNLESS AN ALTERNATE MIX IS SUBMITTED AND REVIEWED BY THE ENGINEER.

2. SPECIAL INSPECTION OF CONCRETE WORK IS REQD WHERE NOTED ABOVE. WHEN REQD, SPECIAL INSPECTION SHALL INCLUDE THE INSPECTION OF REINFORCEMENT, AND THE INSPECTION OF THE CONCRETE PLACEMENT OPERATIONS AS WELL AS CONCRETE CYLINDER TESTS, PER C.B.C. SECTION 1705.3. THE FOLLOWING THREE CRITERIA ESTABLISH THE REQD MINIMUM SAMPLING FREQUENCY FOR EACH CLASS OF CONCRETE:

   A. ONE EACH DAY A GIVEN CLASS IS PLACED, NOR LESS THAN
   B. ONCE FOR EACH 150 yd OF EACH CLASS PLACED EACH DAY, NOR LESS THAN
   C. ONCE FOR EACH 5000 ft OF SLAB OR WALL SURFACE AREA PLACED EACH DAY.

3. SPLICES OF CONTINUOUS REINFORCEMENT SHALL HAVE A MINIMUM LAP PER DETAILS 202/SD2 AND 203/SD2 UNLESS NOTED OTHERWISE. ALL REINFORCING STEEL SHALL BE SECURELY WIRED AND PROPERLY SUPPORTED ABOVE GROUND, AND AWAY FROM FORMS. REINFORCING BAR FABRICATION, LAPS AND PLACEMENT SHALL CONFORM TO THE MANUAL OF STANDARD PRACTICE OF THE CONCRETE REINFORCING STEEL INSTITUTE.

4. REINFORCING SHALL BE NEW STOCK, DEFORMED BARS, CONFORMING TO ASTM A-615 AS FOLLOWS (U.N.O.) : NO. 3 AND SMALLER: GRADE 40; NO. 4 AND LARGER: GRADE 60
   A. ALL BARS TO BE WELDED SHALL MEET THE REQUIREMENTS OF ASTM A706, GRADE 60.
   B. WELDED WIRE FABRIC SHALL CONFORM TO ASTM A-185, FLAT SHEETS ONLY. LAP FABRIC 6" MINIMUM.
   C. REINFORCEMENT PLACEMENT SHALL CONFORM TO DETAIL A/SD3
   D. ANCHOR BOLTS SHALL BE ASTM A307, U.N.O. AND SHALL CONFORM TO DETAIL 201/SD2

5. REINFORCEMENT COVER: ALL DIMENSIONS SHOWING THE LOCATIONS OF REINFORCEMENT STEEL NOT NOTED AS "CLEAR", ARE TO THE CENTER OF THE STEEL. MINIMUM CLEAR COVERAGE OF REINFORCEMENT SHALL BE AS FOLLOWS:
   A. CONCRETE CAST AGAINST EARTH,
      EXCEPT SLABS ON GRADE: 3"
      SLABS ON GRADE: 1-1/2" U.N.O.
   B. CONCRETE CAST IN FORMS, BUT EXPOSED TO EARTH OR WEATHER:
      No. 5 REINFORCING AND SMALLER: 1-1/2"
      No. 6 REINFORCING AND LARGER: 2"
   C. CONCRETE NOT EXPOSED TO WEATHER OR IN CONTACT WITH THE GROUND:
      SLABS, WALLS AND JOISTS: 3/4"
      BEAMS AND COLUMNS: 1-1/2"

6. UNFORMED CONCRETE SURFACE CURING:
   A. CURE FOR ONE TO SEVEN DAYS BY MAINTAINING TEMPERATURE ABOVE 50 DEGREES FAHRENHEIT, AND IN A MOIST CONDITION.
   B. APPLY MEMBRANE-FORMING CURING COMPOUND TO DAMP CONCRETE IMMEDIATELY AFTER COMPLETION OF THE MOIST-CURING PERIOD.

7. THE CONTRACTOR SHALL INFORM THE ENGINEER AT LEAST TWO DAYS PRIOR TO POURING ANY STRUCTURAL CONCRETE SO THAT OBSERVATION OF THE WORK MAY BE PERFORMED AS REQUIRED BY THE ENGINEER'S CONTRACT OR THE CODE.

8. FOOTING/GRADE BEAM CONSTRUCTION JOINTS SHALL CONFORM TO DETAIL 204/SD2

9. CRACK CONTROL JOINTS SHALL BE PLACED IN CONCRETE SLABS ON GRADE AT A SPACING OF 12'-0" MAX. O.C. EACH WAY (U.N.O. ON PLAN) PER DETAIL 205A/SD2 LOCATION OF SLAB ON GRADE CONSTRUCTION JOINTS SHALL BE APPROVED BY THE ENGINEER PRIOR TO CONSTRUCTION. SLAB ON GRADE CONSTRUCTION JOINTS SHALL CONFORM TO 205B/SD2

10. ALL PIPES AND DUCTS THROUGH CONCRETE SHALL BE SLEEVED. VERIFY OPENINGS WITH PLUMBER AND ELECTRICIAN. SEE DETAIL 206/SD2

11. IF SPECIFIED, WELDED WIRE FABRIC SHALL BE 6x6-W1.4xW1.4. WIRE FABRIC SHALL BE ELECTRICALLY WELDED STEEL PER ASTM A185. LAP 6" MINIMUM AT ALL EDGES AND TIE AT THREE PLACES TO REINFORCING DOWELS (WHERE OCCUR) EXCEPT LOCATIONS WHERE SLAB IS INDEPENDENT OF FOUNDATION. CONTRACTOR SHALL PROVIDE SUPPORT CHAIRS TO ENSURE FABRIC IS LOCATED IN THE CENTER OF THE SLAB.

12. WELDING OF REINFORCING BARS SHALL CONFORM TO AWS D1.4 USING ASTM A706 REINFORCING BAR SPECIFICATIONS.

STRUCTURAL STEEL NOTES

1. THE FOLLOWING SECTION APPLIES TO ALL STRUCTURAL STEEL 1/8" THICK OR LARGER.
2. ALL WORK SHALL BE IN ACCORDANCE WITH THE CBC CHAPTER 22, AISC 15th EDITION, AND THE 2015 A.W.S. D1.1.
3. STEEL MATERIALS SHALL CONFORM TO THE FOLLOWING:
   A. PLATES AND SHAPES, U.N.O. — ASTM A992 (fy = 50 ksi), OR ASTM A572, GRADE 50
   B. STRUCTURAL TUBE COLUMNS AND BEAMS: — ASTM A500, GRADE B.
   C. PIPE COLUMNS: — ASTM A53, TYPE E OR S, GRADE B
   D. ROD — ASTM A36 (fy = 36 ksi)
4. FASTENERS SHALL CONFORM TO THE FOLLOWING:
   A. ANCHOR BOLTS: — ASTM A307, U.N.O.
   B. STEEL TO WOOD CONNECTIONS: — ASTM A307, U.N.O. USE CUT WASHERS (IF CONCEALED) AND MALLEABLE IRON WASHERS (IF EXPOSED)
5. WELDING ELECTRODES SHALL CONFORM TO 2015 A.W.S. D1.1 AND SHALL BE LOW HYDROGEN MATCHING FILLER METAL.
6. SURFACES OF STEEL TO BE FIELD WELDED SHALL BE FREE AND CLEAR OF ALL PAINT, DIRT, GREASE, OR OTHER DELETERIOUS COATINGS.
7. STEEL FRAMING, EXCEPT THOSE PORTIONS TO BE EMBEDDED IN CONCRETE, CONCEALED IN FRAMING, FIELD WELDED, OR HIGH STRENGTH BOLTED SHALL BE SHOP-PAINTED PER THE SPECIFICATIONS.
8. FIELD PAINT ALL EXPOSED STEEL SURFACES AFTER INSTALLATION, PER THE SPECIFICATIONS.
9. ALL WELDERS SHALL BE QUALIFIED BY A.W.S. PROCEDURES FOR THE REQUIRED WELDING.
10. SUBMIT CERTIFICATION OF COMPLIANCE FOR ALL STEEL MATERIALS.

DO NOT SCALE THESE DRAWINGS

TOWN OF DANVILLE
FOR REVIEW ONLY

ADVANCED ENGINEERING
3361 Walnut Blvd. Ste. 100
Brentwood, CA 94513
Office: 925.516.3502
Fax: 925.262.4662

THE DRAWINGS AND SPECIFICATIONS APPEARING HEREIN CONSTITUTE THE ORIGINAL WORK OF **DP ADVANCED ENGINEERING, INC.** AND SHALL BE CONSIDERED CONFIDENTIAL AND PROPRIETARY PROPERTY. COPYING OR REPRODUCING ANY PORTION OF THESE DOCUMENTS WITHOUT WRITTEN AUTHORIZATION IS STRICTLY PROHIBITED. THE CONTRACT DOCUMENTS WERE PREPARED FOR USE ON THIS SPECIFIC SITE IN CONJUNCTION WITH ITS ISSUE DATE AND ARE NOT SUITABLE FOR USE ON A DIFFERENT SITE OR AT A LATER TIME. USE OF THESE DRAWINGS FOR REFERENCE OR EXAMPLE ON ANOTHER PROJECT REQUIRES THE SERVICES OF A PROPERLY LICENSED ENGINEER. REPRODUCTION OF THE CONTRACT DOCUMENTS FOR REUSE ON ANOTHER PROJECT IS NOT AUTHORIZED.

TOWN OF DANVILLE
ACCESSORY DWELLING UNIT CONTEMPORARY
DANVILLE, CALIFORNIA

1	PLAN CHECK RESPONSES	04-19-23
2		
3		
4		
5		
6		

PLEASE NOTE THE REVISION NUMBER AND DATE ARE FOR STRUCTURAL SHEETS ONLY.

Engineering Seal:

REGISTERED PROFESSIONAL ENGINEER
Justen J. Peek
C-49251
Exp. 12/31/2024
CIVIL
State of California

Sheet Description:
GENERAL STRUCTURAL SPECIFICATIONS AND NOTES

No Scale

Initial Issue Date: March 24, 2023
Drawn By: E. Bennett
Project Designer: J. Peek
Project Manager: J. Peek Ext. 23
Job No. G010120
Sheet No. SN2

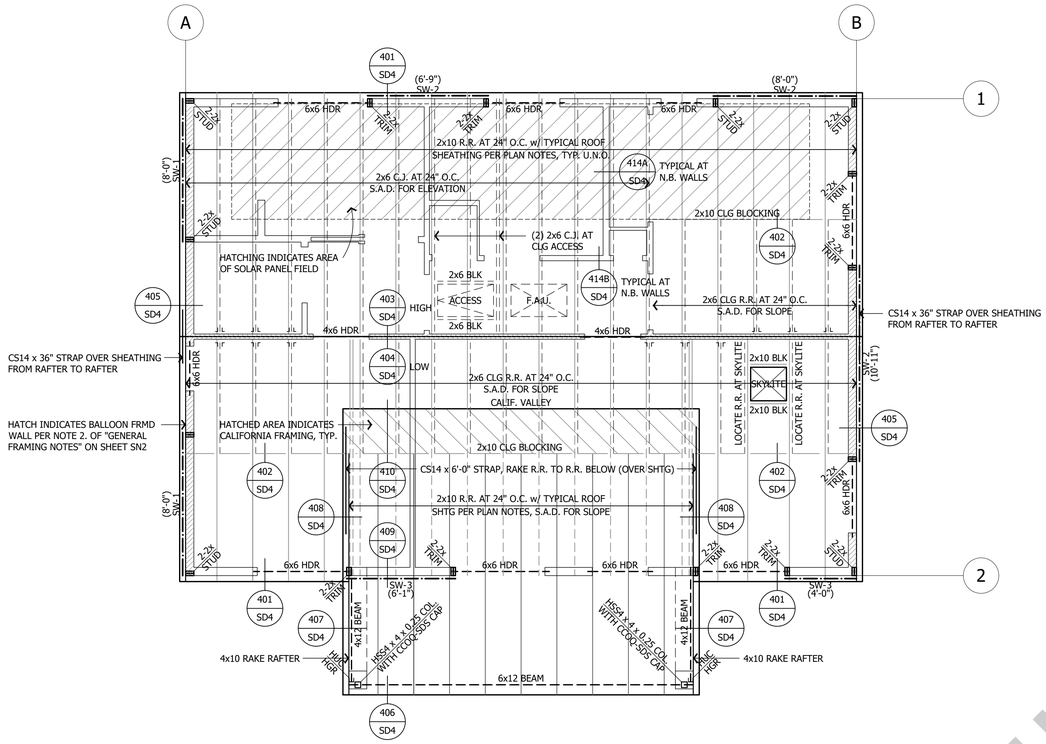

A ROOF FRAMING PLAN - CONTEMPORARY

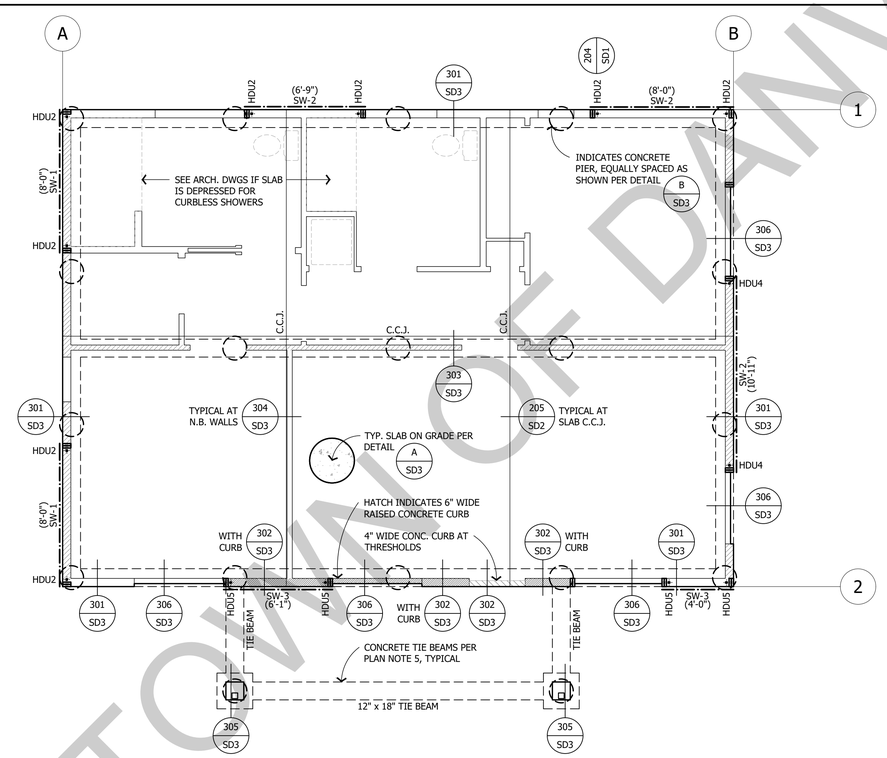

B FOUNDATION PLAN - CONTEMPORARY - CONCRETE SLAB ON PIERS

FOUNDATION NOTES

1. SEE ARCHITECTURAL DRAWINGS FOR STUD SIZES AND OTHER REQUIREMENTS.
2. SEE ARCHITECTURAL DRAWINGS FOR ALL DIMENSIONS, ELEVATIONS, ETC. THE PROJECT ARCHITECT IS RESPONSIBLE FOR SPECIFYING DIMENSIONS TO ALL PROJECT ELEMENTS. THE DIMENSIONS SHOWN ON THE FOUNDATION PLANS SHALL NOT BE USED FOR CONSTRUCTION. THE FOUNDATION SHALL BE CONSTRUCTED USING THE DIMENSIONS SHOWN ON THE ARCHITECTURAL PLANS.
3. DETAIL KEYS AND OTHER INFORMATION ARE TYPICAL.
4. THE FOUNDATION SHALL CONSIST OF A UNIFORM THICKNESS REINFORCED CONCRETE STRUCTURAL SLAB PER DETAIL (b/SD3) SUPPORTED BY DRILLED CONCRETE PIERS PER
   A. STEP FOUNDATION AS (A/SD3) REQUIRED FOR FLOOR ELEVATION CHANGES AND COMPLIANCE WITH DETAILS. THE CONTRACTOR SHALL GRADE THE SITE TO PROVIDE PROPER SURFACE DRAINAGE AWAY FROM THE FOUNDATION AT ALL LOCATIONS. ROOF GUTTER DOWNSPOUTS SHALL NOT DISCHARGE NEAR THE FOUNDATION.
5. CONCRETE TIE BEAMS SHALL BE 12" x 18" AND SHALL BE REINFORCED WITH (2) #4 HORIZ. REINFORCING, TOP AND BOTTOM. TIE BEAM REINFORCEMENT SHALL CONTINUE THROUGH FOUNDATION ELEMENTS OR SHALL BE PROPERLY TIED TO FOUNDATION REINFORCING.
6. LANDSCAPE SLABS SHALL BE INDEPENDENT OF THE FOUNDATION. THE CONTRACTOR SHALL INSTALL ASPHALT-IMPREGNATED EXPANSIVE JOINT MATERIAL BETWEEN SLABS AND THE FOUNDATION.
7. HOLDOWNS:
   HOLDOWNS NOTED OCCUR AT THE LEVEL OF FRAMING SHOWN FOR CONNECTION OF WALLS ABOVE TO FOOTING.
   A. ALL HOLDOWN MEMBERS IN CONTACT WITH P.T. MATERIAL SHALL BE HOT-DIP GALVANIZED. USE HOT-DIPPED GALVANIZED ANCHOR BOLTS WITH 3" X 3" X 1/4" PLATE WASHERS. PLAIN CARBON STEEL FASTENERS IN SBX/DOT AND ZINC BORATE PRESERVATIVE-TREATED WOOD SHALL BE PERMITTED.
   B. ALL HOLDOWNS SHALL BE INSTALLED WITH ANCHORS PER DETAIL (112/SD1)
   C. CONTRACTOR SHALL REVIEW HOLDOWN ANCHOR REQUIREMENTS FOR EMBEDMENT CONDITIONS THAT REQUIRE DEEPENED STEM WALL. REFER TO FOR REQUIREMENTS. (112/SD1)
   D. PROVIDE POSTS AT ALL HOLDOWNS AS SHOWN IN DETAIL (112/SD1) WHERE DOUBLE 2x POSTS ARE USED, SISTER WITH 16d FACE NAILS AT SILL NAILING PER SHEARWALL SCHEDULE. WHERE 3x MEMBERS AT PANEL EDGES ARE REQUIRED, USE 4x MINIMUM POST FOR HOLDOWN PER FRAMER SHALL CONFIRM LAYOUT BEFORE CONCRETE IS POURED. NOTIFY ENGINEER OF CONFLICTS PRIOR TO PROCEEDING. (103/SD1)
8. CONTRACTOR SHALL REVIEW HOLDOWN ANCHOR REQUIREMENTS FOR EMBEDMENT CONDITIONS THAT REQUIRE DEEPENED FTG. REFER TO FOR REQUIREMENTS. (112/SD1)
9. REFER TO THE PROJECT SOILS REPORT IF APPLICABLE, FOR ADDITIONAL FOUNDATION AND SITE CONSTRUCTION REQUIREMENTS. ALL FOUNDATION ELEMENTS SHALL COMPLY WITH ALL CONDITIONS CONTAINED WITHIN APPROPRIATE SOILS REPORT AND REQUIREMENTS OF 2016 CBC CHAPTER 18. THE RESPONSIBLE SOILS ENGINEER IF APPLICABLE, SHALL OBSERVE ALL SLAB AND FOUNDATION SUBGRADES PRIOR TO PLACING CONCRETE. SEE SOILS REPORT FOR SPECIFIC INSPECTION REQUIREMENTS.
10. ALL FOUNDATION PLATES AND MUDSILLS SHALL BE PRESSURE-TREATED DOUGLAS FIR MARKED OR BRANDED BY AN APPROVED AGENCY. SEE SHEARWALL SCHEDULE FOR SHEARWALL LOCATIONS THAT REQUIRE 3x MINIMUM MUDSILLS. FOUNDATION PLATES AND MUDSILLS SHALL BE BOLTED TO THE FOUNDATION WITH NOT LESS THAN 5/8" DIA. HOT-DIPPED GALVANIZED ANCHOR BOLTS WITH 3" x 3" x 1/4" PLATE WASHERS. PLAIN CARBON STEEL FASTENERS IN SBX/DOT AND ZINC BORATE PRESERVATIVE-TREATED WOOD SHALL BE PERMITTED. EMBED ANCHOR BOLTS 7" INTO CONCRETE FOUNDATION, WALL OR 12" INTO GROUTED MASONRY, AND SPACE NOT MORE THAN 4'-0" APART, UNLESS NOTED OTHERWISE ON THE SHEARWALL SCHEDULE. THERE SHALL BE A MINIMUM OF TWO BOLTS PER BOARD WITH ONE BOLT LOCATED 12" MAXIMUM AND 4-3/8" MINIMUM OF EACH END. FOR ADDITIONAL INFORMATION SEE DETAIL (201/SD2)
11. SEE GENERAL NOTES FOR ADDITIONAL REQUIREMENTS.
    ALL DETAIL CALLOUTS SHALL BE CONSIDERED TYPICAL. CONTRACTOR SHALL REVIEW THE DETAIL SHEETS FOR DETAILS NOT SPECIFICALLY REFERENCED.
12. SHEARWALLS:
    LENGTHS OF SHEARWALLS ARE SHOWN ABOVE OR BELOW SHEARWALL NUMBER (SEE PLAN). THE NUMBERS INDICATE THE MINIMUM DESIGN LENGTH OF THE SHEARWALL. SEE DETAIL (103/SD1)

ROOF FRAMING NOTES

1. WALLS SHOWN AS SOLID ARE BELOW FRAMING. SEE ARCHITECTURAL DRAWINGS FOR STUD SIZES AND OTHER REQUIREMENTS.
2. SEE ARCHITECTURAL DRAWINGS FOR ALL DIMENSIONS, ELEVATIONS, ETC. THE PROJECT ARCHITECT IS RESPONSIBLE FOR SPECIFYING DIMENSIONS TO ALL PROJECT ELEMENTS.
3. DETAIL KEYS AND OTHER INFORMATION ARE TYPICAL.
4. ROOF FRAMING TERMS:
   ALL BEAMS SHALL BE CONSIDERED FLUSH, (TOP OF BEAM EQUAL TO TOP OF ROOF FRAMING AND BOTTOM OF ROOF FRAMING) UNLESS NOTED OTHERWISE ON PLANS AS ONE OF THE FOLLOWING:
   A. **DROPPED:** BEAM IS SET BELOW ROOF FRAMING WITH TOP OF BEAM SET AT BOTTOM OF ROOF FRAMING.
   B. **DOWNSET:** BEAM IS DEEPER THAN THE ROOF FRAMING AND SET WITH TOP OF BEAM EQUAL TO TOP OF ROOF FRAMING. BOTTOM OF BEAM EXTENDS BELOW ROOF FRAMING.
   C. **UPSET:** BEAM IS DEEPER THAN THE ROOF FRAMING AND SET WITH BOTTOM OF BEAM EQUAL TO BOTTOM OF ROOF FRAMING. TOP OF BEAM EXTENDS ABOVE ROOF FRAMING.
   D. **"HDR":** BOTTOM OF HEADER IS SET AT ROUGH OPENING (R.O.). SEE ARCH. FOR HEIGHT. IF HEADER BREAKS TOP PLATES INSTALL CS14 x 36" STRAP FROM FACE OF PLATE TO FACE OF HEADER, TYPICAL AT EACH END OF HEADER.
5. ROOF FRAMING:
   RAFTERS SHALL BE SIZED AS SPECIFIED ON THE ROOF PLAN. DOUBLE RAFTERS AND RAFTER HEADERS SHALL BE PROVIDED AROUND ALL OPENINGS IN THE ROOF. DOUBLE RAFTERS BELOW DORMER AND OTHER ROOF MOUNTED WALLS. RAFTER FRAMING SHALL BE PER THE FOLLOWING SCHEDULE, AND SPACED AT 2'-0" MAX. ON CENTER AS SHOWN ON THESE PLANS. SEE TYPICAL ROOF RAFTER DETAILS ON SHEET SD4 FOR TYPICAL DETAILING.

MAX. (HORIZ.) SPAN	JOIST TYPE (U.N.O.)	SPACING, U.N.O.
15'-6"	2x10 D.F. No. 2	2'-0" O.C.

   A. RAFTER SIZES ABOVE ARE MINIMUM. USE LARGER RAFTERS IF NOTED ON THE FRAMING PLANS OR AS REQUIRED ON THE ARCHITECTURAL PLANS FOR INSULATING PURPOSES, EXPOSED, ETC.
   B. BLOCKING OF EQUAL DEPTH OF THE RAFTERS SHALL BE PROVIDED BETWEEN ALL RAFTERS AT THEIR SUPPORTS.
   C. USE (3) 16d AT 16" O.C. TO NAIL DOUBLE MEMBERS TOGETHER OR 3/4" DIA. THRU BOLTS AT 16" O.C. TO BOLT THREE OR MORE MEMBERS TOGETHER U.N.O.
6. MANUFACTURED BEAM FRAMING:
   ALL MANUFACTURED WOOD BEAMS SHALL BE MANUFACTURED BY "TRUS JOIST" WEYERHAUSER. REFER TO "GENERAL FRAMING NOTES" ON SHEET SN1 FOR MATERIAL SPECIFICATIONS.
7. ROOF SHEATHING:
   TYPICAL ROOF SHEATHING SHALL BE 15/32" THICK (24/0 OR 32/16) CDX GRADE PLYWOOD (OR EQUIVALENT-RATED ORIENTED STRAND BOARD (O.S.B.) WITH GAP PER MANUFACTURER. ROOF SHEATHING SHALL BE NAILED WITH 8d AT 6" O.C. (EDGES) AND 8d AT 12" O.C. (FIELD), UNLESS NOTED OTHERWISE ON THE PLAN. ORIENT SHEATHING WITH FACE GRAIN PERPENDICULAR TO FRAMING MEMBERS, AND STAGGER END JOINTS.
   A. PLYWOOD SHEETS LOCATED AT ROOF EDGES OR CHANGES IN FRAMING SHALL BE AT LEAST 24 INCHES WIDE OR SHALL BE EDGE BLOCKED AND NAILED. EDGE NAIL PLYWOOD TO ALL GABLE AND SHEAR TRUSSES (TRUSSES WITH DRAG LOADS).
   B. EDGE NAIL ROOF PLYWOOD TO ALL DRAG MEMBERS (RAFTERS OR BEAMS w/ HORIZ. STRAPS).
8. SUPPORT OF BEAMS, HIPS, GIRDERS, ETC.:
   INSTALL POSTS (POST SIZE TO MATCH BEAM AND WALL SIZE), MINIMUM BELOW ALL ROOF BEAMS AND GIRDERS. CONTRACTOR SHALL VERIFY FRAMING LAYOUT TO ENSURE CONTINUOUS AND SOLID BLOCKING UNDER ALL CONCENTRATED LOADS.
9. CRICKETS AND/OR CALIFORNIA (BUILT-UP FRAMING):
   CRICKETS AND/OR CALIFORNIA FRAMING SHALL BE CONSTRUCTED WITH 2x6 MEMBERS AT 24" O.C. SUPPORTED TO THE ROOF BELOW AT 48 INCHES ON CENTER. ROOF PLY SHALL CONTINUE BELOW CRICKETS AND/OR CALIFORNIA FRAMING.
10. HEADERS:
    WINDOW AND DOOR HEADERS SHALL CONFORM TO THE HEADER SCHEDULE, U.N.O. ON THE PLAN (210/SD2)
11. TOP PLATE SPLICES:
    TOP PLATE SPLICES OF ALL WALLS SHALL CONFORM TO DETAIL (209/SD2)
    INSTALL CS14 x 3'-0" LONG STRAPS AT TOP PLATE SLOPE CHANGES AND OTHER DISCONTINUOUS TOP PLATE CONDITIONS.
12. **TOP CONNECTORS SHALL BE INSTALLED AT EXTERIOR WALL TOP PLATES AT 4'-0" O.C. MINIMUM WHERE SHEAR IS NOT NOTED ON PLANS.**
13. SEE GENERAL NOTES FOR ADDITIONAL REQUIREMENTS. ALL DETAIL CALLOUTS SHALL BE CONSIDERED TYPICAL. THE CONTRACTOR SHALL REVIEW THE DETAIL SHEETS FOR DETAILS NOT SPECIFICALLY REFERENCED.
14. SHEARWALLS AT OPENING TRIMMERS:
    WHERE SHEARWALL LENGTH SPECIFIED ON PLANS REQUIRES EDGE NAILING TO WINDOW AND/OR DOOR TRIMMERS, REFER TO DETAIL (108/SD1)
15. SHEARWALLS:
    LENGTHS OF SHEARWALLS ARE SHOWN ABOVE OR BELOW SHEARWALL NUMBER (SEE PLAN). THE NUMBERS INDICATE THE MIN. DESIGN LENGTH OF THE SHEARWALL. SEE (103/SD1)
16. HOLDOWN STRAPS
    WHERE HOLDOWN STRAPS ARE SPECIFIED ON PLANS, INSTALL PER DETAIL (112/SD1) (113/SD1)
    A. **ALL NAIL HOLES SHALL BE FILLED ON HOLDOWN STRAPS**

DO NOT SCALE THESE DRAWINGS

ADVANCED ENGINEERING
3361 Walnut Blvd. Ste. 100
Brentwood, CA 94513
Office: 925.516.3502
Fax: 925.262.4662

THE DRAWINGS AND SPECIFICATIONS APPEARING HEREIN CONSTITUTE THE ORIGINAL WORK OF **DP ADVANCED ENGINEERING, INC.** AND SHALL BE CONSIDERED CONFIDENTIAL AND PROPRIETARY PROPERTY. COPYING OR REPRODUCING ANY PORTION OF THESE DOCUMENTS WITHOUT WRITTEN AUTHORIZATION IS STRICTLY PROHIBITED. THE CONTRACT DOCUMENTS WERE PREPARED FOR USE ON THIS SPECIFIC SITE IN CONJUNCTION WITH ITS ISSUE DATE AND ARE NOT SUITABLE FOR USE ON A DIFFERENT SITE OR AT A LATER TIME. USE OF THESE DRAWINGS FOR REFERENCE OR EXAMPLE ON ANOTHER PROJECT REQUIRES THE SERVICES OF A PROPERLY LICENSED ENGINEER. REPRODUCTION OF THE CONTRACT DOCUMENTS FOR REUSE ON ANOTHER PROJECT IS NOT AUTHORIZED.

TOWN OF DANVILLE
ACCESSORY DWELLING UNIT
CONTEMPORARY
DANVILLE, CALIFORNIA

1	PLAN CHECK RESPONSES	04-19-23
2		
3		
4		
5		
6		

PLEASE NOTE THE REVISION NUMBER AND DATE ARE FOR STRUCTURAL SHEETS ONLY.

Engineering Seal:

Sheet Description:
CONTEMPORARY UNIT
STRUCTURAL ROOF FRAMING PLAN AND FOUNDATION PLAN

Scale: 1/4" = 1'-0"

Initial Issue Date:	March 24, 2023
Drawn By:	E. Bennett
Project Designer:	J. Peek
Project Manager:	J. Peek Ext. 23
Job No.	G010120
Sheet No.	S1

TOWN OF DANVILLE

SHEETS MAY BE PLACED HORIZONTALLY (NOT SHOWN), PROVIDE BLOCKING AT ALL EDGES.

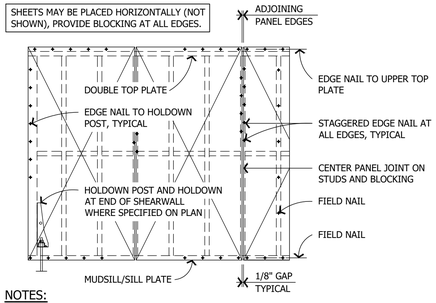

NOTES:

1. SEE SHEARWALL SCHEDULE FOR REQUIRED SHEATHING, NAILING, AND SILL CONNECTIONS.
2. FOR LOCATION OF TIEDOWNS AND TD POSTS, SEE TYPICAL DETAILS ON SHEET SD2.

101 TYP. SHEARWALL ELEVATION

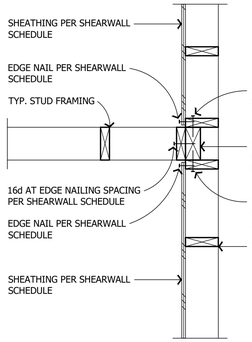

102 SHEARWALL INTERSECTION PLAN

3/8" PLYWOOD SHEATHING

SHEARWALL LENGTH: / SHEARWALL DESIGNATION:	X'-X" SW-1	X'-X" SW-2	X'-X" SW-3	X'-X" SW-4	X'-X" SW-5
APA RATED SHEATHING:	3/8"	3/8"	3/8"	3/8"	3/8" STR. 1
8d EDGE NAIL (0.131 DIA):	8d @ 6" O.C.	8d @ 4" O.C.	8d @ 3" O.C.	8d @ 2" O.C.	8d @ 2" O.C.
8d FIELD NAIL (0.131 DIA.):	8d @ 12" O.C.	8d @ 12" O.C.	8d @ 12" O.C.	8d @ 12" O.C.	8d @ 12" O.C.
FRAMING MEMBER AT ADJOINING PANEL EDGES:	SINGLE 2x	SINGLE 2x	SINGLE 3x, 4x OR 2-2x w/ 10d @ 3" O.C.	SINGLE 3x OR 4x	SINGLE 3x OR 4x
3x SILL REQUIRED:	NO	NO	NO	NO	NO
SILL CONN. (BEAM/BLKG): 16d NAIL (0.148 DIA.): SDS SCREW (SDS25600):	16d @ 6" O.C. SDS @ 24" O.C.	16d @ 4" O.C. SDS @18" O.C.	16d @ 4" O.C. SDS @ 12" O.C.	16d @ 3" O.C. STAGGERED SDS @ 10" O.C.	16d @ 2" O.C. STAGGERED SDS @ 8" O.C.
SILL CONNECTION (RIM): 16d NAIL (0.148 DIA.): SDS SCREW (SDS25600):	16d @ 6" O.C. SDS @ 24" O.C.	16d @ 4" O.C. SDS @18" O.C.	16d @ 4" O.C. SDS @ 12" O.C.	16d @ 4" O.C. & LTP5 @ 36" O.C. SDS @ 10" O.C.	16d @ 4" O.C. & LTP5 @ 24" O.C. SDS @ 8" O.C.
OR 5/8" A.B. W/ 2x MUDSILL: OR 5/8" A.B. W/ 3x MUDSILL:	@ 48" O.C. MAX **@ 48" O.C. MAX**	@ 42" O.C. MAX @ 48" O.C. MAX	@ 36" O.C. MAX @ 42" O.C. MAX	@ 28" O.C. MAX @ 36" O.C. MAX	@ 24" O.C. MAX @ 30" O.C. MAX
TOP CONNECTION - "RBC" OR TOP CONNECTION - "LTP4" OR TOP CONNECTION - "LS50" OR TOP CONNECTION - "A35"	@ 20" O.C. MAX @ 24" O.C. MAX @ 24" O.C. MAX @ 30" O.C. MAX	@ 12" O.C. MAX @ 18" O.C. MAX @ 18" O.C. MAX @ 22" O.C. MAX	@ 10" O.C. MAX @ 12" O.C. MAX @ 12" O.C. MAX @ 16" O.C. MAX	@ 8" O.C. MAX @ 10" O.C. MAX @ 10" O.C. MAX @ 12" O.C. MAX	**@ 6" O.C. MAX** @ 8" O.C. MAX @ 8" O.C. MAX @ 10" O.C. MAX

1/2" PLYWOOD SHEATHING

SHEARWALL LENGTH: / SHEARWALL DESIGNATION:	X'-X" SW-6	X'-X" SW-7	X'-X" SW-8
APA RATED SHEATHING:	15/32" STR. 1	15/32" STR. 1 EACH FACE	15/32" STR. 1 EACH FACE
10d EDGE NAIL (0.148 DIA):	10d @ 2" O.C.	10d @ 4" O.C.	10d @ 3" O.C.
10d FIELD NAIL (0.148 DIA.):	10d @ 12" O.C.	10d @ 12" O.C.	10d @ 12" O.C.
FRAMING MEMBER AT ADJOINING PANEL EDGES:	SINGLE 3x OR 4x	SINGLE 3x OR 4x	SINGLE 3x OR 4x
3x SILL REQUIRED:	YES (SEE NOTE 5)	YES (SEE NOTE 5)	YES (SEE NOTE 5)
SILL CONN. (BEAM/BLKG): SDS SCREW (SDS25600):	SDS @ 6" O.C. STAGGERED	SDS @ 4" O.C. STAGGERED	SDS @ 4" O.C. STAGGERED
SILL CONNECTION (RIM): 16d NAIL (0.148 DIA.): SDS SCREW (SDS25600):	16d @ 4" O.C. & LTP5 @ 12" O.C. SDS @ 7" O.C.	16d @ 3" O.C. & LTP5 @ 12" O.C. SDS @ 6" O.C.	16d @ 2" O.C. & LTP5 @ 12" O.C. SDS @ 5" O.C.
OR 5/8" A.B. W/ 2x MUDSILL: OR 5/8" A.B. W/ 3x MUDSILL:	-- @ 24" O.C. MAX	-- @ 18" O.C. MAX	-- @ 16" O.C. MAX
TOP CONNECTION - "RBC" OR TOP CONNECTION - "LTP4" OR TOP CONNECTION - "LS50" OR TOP CONNECTION - "A35"	@ 6" O.C. MAX @ 8" O.C. MAX @ 8" O.C. MAX @ 8" O.C. MAX	-- -- @ 6" O.C. MAX @ 6" O.C. MAX	-- -- @ 6" O.C. MAX

1. APA RATED SHEATHING SHALL BE 4'-0" x 8'-0" MIN. EXPECT AT BOUNDARIES OR AT CHANGES IN FRAMING WHERE A 16" MINIMUM WIDTH IS ALLOWED. ALL PANEL EDGES AND BOUNDARIES SHALL BE NAILED TO 2X FRAMING U.N.O.
   A. PLYWOOD AND OSB SHALL BE TYPE CDX GRADE OR BETTER (EXCEPT WHERE STRUCTURAL 1 GRADE IS NOTED).
   B. STR. 1 = STRUCTURAL 1 GRADE PLYWOOD OR O.S.B.
2. ALL NAILS SHALL HAVE MINIMUM SHANK DIAMETER AS SPECIFIED IN SCHED.
   A. GALVANIZED NAILS SHALL BE HOT DIPPED OR TUMBLED.
   B. ALL FASTENERS THAT ARE INSTALLED INTO OR IN CONTACT WITH PRESSURE TREADED LUMBER ARE TO BE HOT DIPPED GALVANIZED
3. WHEN FASTENERS ARE SPACED LESS THEN 4" ON CENTER, NAILING AT PANEL EDGES SHOULD BE STAGGERED PER DETAIL 104A/SD1
4. PREDRILL SILL CONNECTIONS WHERE NEEDED TO AVOID WOOD SPLITTING. USE DRILL BIT SIZE = 0.75 x NAIL (OR SCREW) DIAMETER.
5. 3x SILL PLATES MAY BE OMITTED WHEN ALTERNATE SHEATHING JOINT AT RIM OR BLOCKING IS PROVIDED PER DETAIL 107/SD1
6. ALL ANCHOR BOLTS MUST BE INSTALLED WITH 3"x3"x0.229" GALVANIZED PLATE WASHERS PER THE CURRENT CBC.
7. WHERE SHEAR MATERIAL IS APPLIED ON BOTH FACES OF A SHEARWALL, AND NAIL SPACING IS LESS THAN 6" O.C. ALL THE FOLLOWING REQ. SHALL BE MET:
   A. USE 3x SILLS AND 3x TOP PLATES.
   B. THE VERTICAL SHEAR PANEL JOINTS ON OPPOSITE FACES SHALL BE OFFSET TO FALL ON DIFFERENT FRAMING MEMBERS, UNLESS SUCH FRAMING MEMBERS ARE 4x OR THICKER.
   C. INSTALL 4x RIM / BLOCKING MINIMUM BELOW ALL DOUBLE SIDED SHEARWALLS.
8. FOR ALTERNATE MUDSILL ANCHORAGE, SEE DETAIL 109/SD1
9. INSTALL DBL 2x POST MIN. AT END OF SHEARWALLS, SEE DETAIL 203/SD2 FOR POST REQUIREMENTS AT HOLDOWNS.

103 SHEARWALL SCHEDULE

THE DRAWINGS AND SPECIFICATIONS APPEARING HEREIN CONSTITUTE THE ORIGINAL WORK OF **DP ADVANCED ENGINEERING, INC.** AND SHALL BE CONSIDERED CONFIDENTIAL AND PROPRIETARY PROPERTY. COPYING OR REPRODUCING ANY PORTION OF THESE DOCUMENTS WITHOUT WRITTEN AUTHORIZATION IS STRICTLY PROHIBITED. THE CONTRACT DOCUMENTS WERE PREPARED FOR USE ON THIS SPECIFIC SITE IN CONJUNCTION WITH ITS ISSUE DATE AND ARE NOT SUITABLE FOR USE ON A DIFFERENT SITE OR AT A LATER TIME. USE OF THESE DRAWINGS FOR REFERENCE OR EXAMPLE ON ANOTHER PROJECT REQUIRES THE SERVICES OF A PROPERLY LICENSED ENGINEER. REPRODUCTION OF THE CONTRACT DOCUMENTS FOR REUSE ON ANOTHER PROJECT IS NOT AUTHORIZED.

ADVANCED ENGINEERING
3361 Walnut Blvd. Ste. 100
Brentwood, CA 94513
Office: 925.516.3502
Fax: 925.262.4662

TOWN OF DANVILLE
ACCESSORY DWELLING UNIT
CONTEMPORARY
DANVILLE, CALIFORNIA

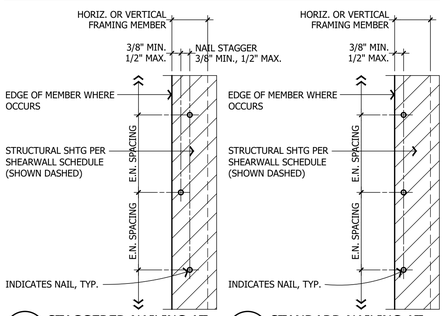

104A STAGGERED NAILING AT SPACING OF 3" OR LESS

104B STANDARD NAILING AT SPACE OF 4" OR GREATER

104 TYP. SHEARWALL EDGE NAIL PATTERN

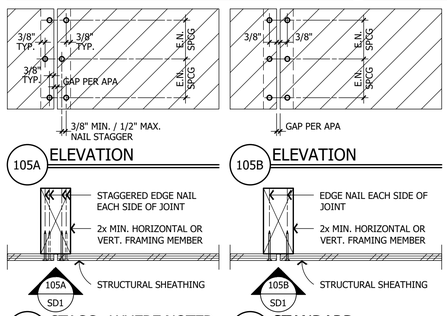

105A ELEVATION

105B ELEVATION

105C STAGG., WHERE NOTED PLAN VIEW

105D STANDARD PLAN VIEW

105 SHEARWALL SHEATHING AT JOINT

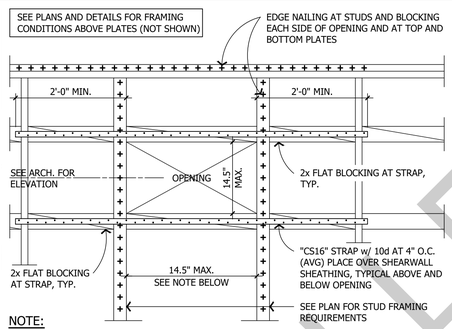

NOTE:

OPENING MAY BE PROVIDED IN SHEARWALLS FOR VENTS, ETC. PROVIDING THE VENT(S) WIDTH DOES NOT EXCEED 10 PERCENT OF THE TOTAL SHEARWALL LENGTH IN THAT LINE OF SHEARWALLS.

106 SMALL OPENING IN SHEARWALL

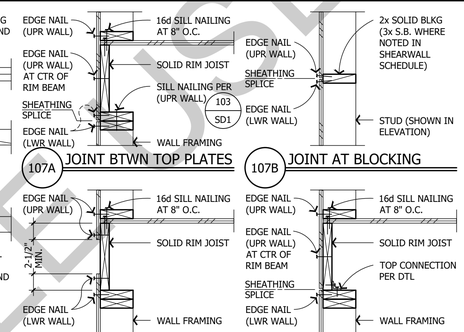

107A JOINT BTWN TOP PLATES

107B JOINT AT BLOCKING

107C JOINT AT SOLID RIM

107D JOINT AT B.O. RIM SIM. AT T.O. RIM

1. FOR ADDITIONAL EDGE NAIL REQUIREMENTS, SEE DETAIL 104/SD1 AND 105/SD1
2. JOINT FLASHING AT ALL HORIZONTAL SHEATHING JOINTS WHEN EXPOSED TO WEATHER, S.A.D.

107 SHEATHING JOINT AT RIM OR BLKG

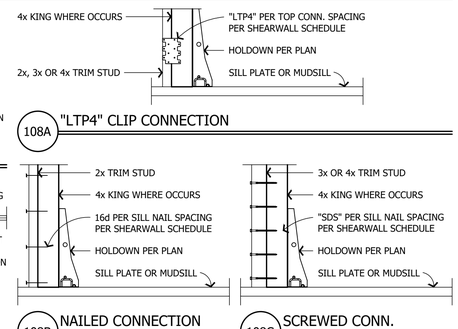

108A "LTP4" CLIP CONNECTION

108B NAILED CONNECTION

108C SCREWED CONN.

108 TRIM STUD TO HOLDOWN POST

STRAP HOLDOWN SCHEDULE

STRAP	END LENGTH	FASTENERS EA. END	MIN. POST SIZE	ALLOWABLE LOAD
"CS14"	15"	(13) 10d (0.148 DIA . x 2-1/2")	(2) 2x	2490 lbs
(2) "CS14"	15"	(13) 10d (0.148 DIA . x 2-1/2") EACH STRAP	4x4 / (2) 2x6	4980 lbs
"CMST14"	30"	(33) 10d (0.148 DIA . x 2-1/2")	4x6 / 6x6	6490 lbs
"CMST12"	39"	(43) 10d (0.148 DIA . x 2-1/2")	4x8 / 6x6	9215 lbs

1. FILL ALL NAIL HOLES PER MANUFACTURER'S REQUIREMENTS.
2. STRAPS SHALL BE INSTALLED OVER PLYWOOD SHEATHING.
3. STRAPS MUST BE INSTALLED FLAT TO THE FACE OF THE POST. NO BENDS, NICKS OR SLACK OF ANY KIND ARE ALLOWED. STRAPS INSTALLED WITH ANY BENDS, NICKS OR SLACK SHALL BE CONSIDERED AS INADEQUATE AND MUST BE RE-INSTALLED.
4. STRAPS MUST BE INSTALLED VERTICALLY WHEN USED AS A HOLDOWN. STRAPS INSTALLED ON A SLOPE OR AT AN ANGLE SHALL BE CONSIDERED AS INADEQUATE AND MUST BE RE-INSTALLED.
5. LOADS INCLUDE A 60% LOAD DURATION INCREASE ON THE FASTENERS FOR WIND OR SEISMIC.
6. CMST STRAPS ONLY - USE EVERY OTHER ROUND HOLE IF THE WOOD TENDS TO SPLIT. INCREASE STRAP LENGTH AS REQUIRED TO ACHIEVE MINIMUM NUMBER OF FASTENERS LISTED IN TABLE ABOVE.
7. PRE-DRILL HOLES TO PREVENT WOOD SPLITTING AS REQUIRED.

NOTE: A. WHERE NOTED, SB1x30 REQUIRES FOOTING WIDTH TO BE 18" WIDE.

SCREWED / BOLTED HOLDOWN SCHEDULE

ANCHOR	POST CONNECTORS	HOLDOWN ANCHOR	MIN. POST	ALLOW. LOAD
"HDU2"	(6) SDS25212 SCREWS	SSTB24 OR SB5/8x24	(2) 2x	2940 lbs
"HDU4"	(10) SDS25212 SCREWS	SSTB24 OR SB5/8x24	(2) 2x	3815 lbs
"HDU5"	(14) SDS25212 SCREWS	SSTB24 OR SB5/8x24	(2) 2x	5645 lbs
"HDU8"	(20) SDS25212 SCREWS	SSTB28 OR SB7/8x24	4x6 / 6x6	7855 lbs
"HDU11"	(30) SDS25212 SCREWS	SB1x30 (A)	4x8 / 6x6	11175 lbs
"HDU14"	(36) SDS25212 SCREWS	PAB8 (OR EQUIV.)	4x8 / 6x6	14390 lbs
"HD19"	(5) 1" DIA. A307 BOLTS	PAB10 (OR EQUIV.)	4x8 / 6x6	19070 lbs

1. RE-TIGHTEN ALL BOLTS PRIOR TO SHEARWALL CLOSE-IN.
2. DOUBLE 2x HOLDOWN POSTS SHALL BE SISTERED TOGETHER PER SILL NAILING REQUIREMENTS FOR SHEARWALL TYPE. SEE DETAIL 103/SD1 FOR MORE INFORMATION.
3. CONTRACTOR'S OPTION TO SUBSTITUTE "STHD" TYPE HOLDOWNS:

ANCHOR	"STHD" OPTION	POST CONNECTORS	MIN. POST	ALLOW. LOAD
"HDU2"	"STHD10"	(20) 16d SINKERS	(2) 2x	2940 lbs
"HDU4"	"STHD14"	(24) 16d SINKERS	(2) 2x	3815 lbs

112 SLAB HOLDOWN SCHEDULES

ALTERNATIVE MUDSILL ANCHORAGE

THE FOLLOWING ALTERNATIVE ANCHORAGE MAY BE INSTALLED IN LIEU OF 5/8" DIA. ANCHOR BOLTS NOTED IN THE SHEARWALL SCHEDULE AND PLAN NOTES.

SHEARWALL DESIGNATION	"MASA" (NOTE 1.) 110/SD1	"TITEN HD" (NOTE 2.) 111/SD1	
X'-X" SW-1	32" O.C.	48" O.C.	
X'-X" SW-2	22" O.C.	36" O.C.	
X'-X" SW-3	16" O.C.	28" O.C.	
X'-X" SW-4	10" O.C. 3x SILL REQUIRED	24" O.C.	
X'-X" SW-5	9" O.C. 3x SILL REQUIRED	24" O.C.	
X'-X" SW-6	8" O.C. 3x SILL REQUIRED	24" O.C. 3/4" DIA. TITEN HD	
X'-X" SW-7 & SW-8	NOT ALLOWED	16" O.C. 3/4" DIA. TITEN HD	

1. SIMPSON "MASA" ANCHORS SHALL BE INSTALLED PER ICC REPORT No. ESR-2555.
2. SIMPSON TITEN HD ANCHORS SHALL BE INSTALLED PER ICC REPORT NO. ESR-2713.

109 ALTERNATIVE MUDSILL ANCHORAGE

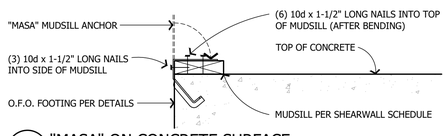

110A "MASA" ON CONCRETE SURFACE

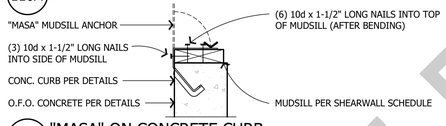

110B "MASA" ON CONCRETE CURB

1. FULL LOADS APPLY FOR SPALLS UP TO A MAX OF 1-1/4" AND A MAX DEPTH OF 7/8". ANY EXPOSED PORTION OF THE "MASA" MUST BE PROTECTED AGAINST POSSIBLE CORROSION.
2. MINIMUM "MASA" END DISTANCE IS 4" AND MINIMUM CENTER-TO-CENTER SPACING IS 8"

110 MASA ANCHORAGES

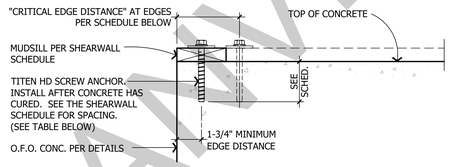

1. DRILL THE HOLE TO THE SPECIFIED EMBEDMENT DEPTH PLUS 1/2" MINIMUM TO ALLOW THE THREAD TAPPING DUST TO SETTLE AND BLOW IT CLEAN USING COMPRESSED AIR.
2. INSERT THE ANCHOR THROUGH THE WASHER AND INTO THE HOLE.
3. TIGHTEN THE ANCHOR UNTIL THE HEX WASHER HEAD COMES IN CONTACT WITH THE WASHER.
4. CAUTION: OVERSIZED HOLES IN THE BASE MATERIAL WILL REDUCE OR ELIMINATE THE MECHANICAL INTERLOCK OF THE THREADS WITH THE BASE MATERIAL AND WILL REDUCE THE ANCHOR'S LOAD CAPACITY. USE A TITEN HD SCREW ANCHOR ONE TIME ONLY. INSTALLING THE ANCHOR MULTIPLE TIMES MAY RESULT IN THREAD WEAR AND REDUCE LOAD CAPACITY.

NOMINAL ANCHOR DIA.	DRILL BIT DIA.	MAX. INSTALL TORQUE	MAX. IMPACT WRENCH TORQUE RATING	EMBEDMENT DEPTH	CRITICAL EDGE DISTANCE
5/8"	5/8"	100	340	6.5"	6 3/8"
3/4"	3/4"	150	385	7.5"	7 5/16"

111 "TITEN HD" ANCHORAGE & NOTES

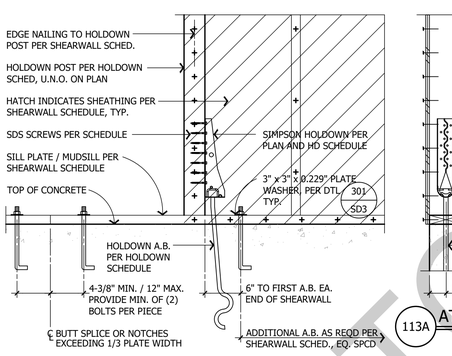

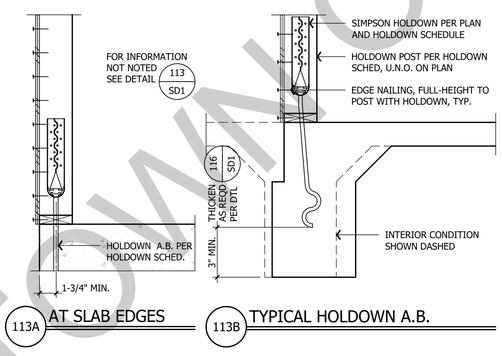

113A AT SLAB EDGES

113B TYPICAL HOLDOWN A.B.

113 TYPICAL HOLDOWN AND HOLDOWN ANCHOR BOLT INSTALLATION

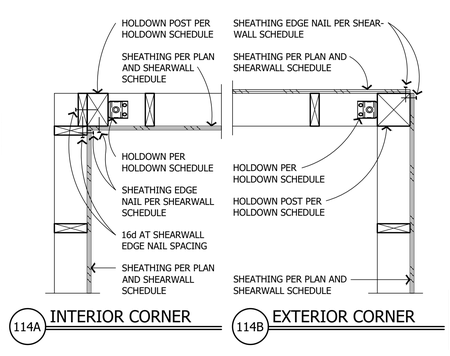

114A INTERIOR CORNER

114B EXTERIOR CORNER

114 HOLDOWN AT SHEARWALL CORNER (PLAN)

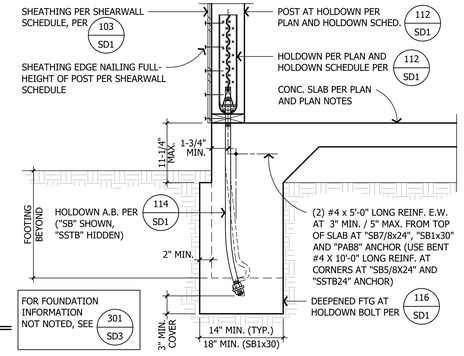

115 HOLDOWN A.B. TO EXTERIOR FOOTING

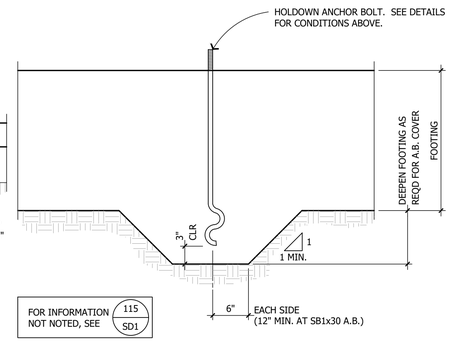

116 DEEPENED FOUNDATION (FOR A.B.)

1	PLAN CHECK RESPONSES	04-19-23
2		
3		
4		
5		
6		

PLEASE NOTE THE REVISION NUMBER AND DATE ARE FOR STRUCTURAL SHEETS ONLY.

Engineering Seal:

REGISTERED PROFESSIONAL ENGINEER Jasten V. Peek C 70751 Exp. 12/31/2024 CIVIL State of California

Sheet Description: SHEARWALL SCHEDULE AND HOLDOWN SCHEDULE AND TYPICAL DETAILS

No Scale

Initial Issue Date: March 24, 2023

Drawn By: E. Bennett

Project Designer: J. Peek

Project Manager: J. Peek Ext. 23

Job No. G010120

Sheet No. SD1

TOWN OF DANVILLE SAMPLE USE ONLY

DO NOT SCALE THESE DRAWINGS

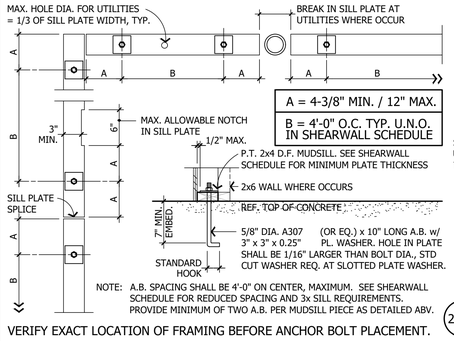

NOTE: A.B. SPACING SHALL BE 4'-0" ON CENTER, MAXIMUM. SEE SHEARWALL SCHEDULE FOR REDUCED SPACING AND 3x SILL REQUIREMENTS. PROVIDE MINIMUM OF TWO A.B. PER MUDSILL PIECE AS DETAILED ABV.

VERIFY EXACT LOCATION OF FRAMING BEFORE ANCHOR BOLT PLACEMENT.

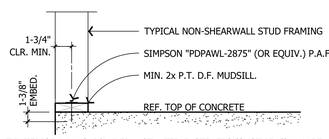

SHOT PIN ALTERNATE: AT INTERIOR WALLS, POWDER ACTUATED FASTENERS (SHOT PINS) MAY BE USED TO ANCHOR MUDSILL TO THE FOUNDATION AT NON-SHEARWALL LOCATIONS ONLY. PROVIDED THE POWDER ACTUATED FASTENERS ARE INSTALLED PER THE REQUIREMENTS LISTED BELOW:

1. P.A.F. ARE ONLY PERMITTED AT INT. NON-STRUC. WALLS. DO NOT INSTALL P.A.F. IN LOCATIONS WHERE BEARING, SHEARWALLS OR BRACED WALLS ARE NOTED ON THE PLANS
2. SIMPSON P.A.F. SHALL BE GALVANIZED AND INSTALLED PER I.C.C. REPORT ESR-2138
3. MIN. EMBED. OF FASTENER IS ACHIEVED WHEN THE WASHER IS FULLY BRNG ON THE PLATE.
4. FASTENERS MUST NOT BE DRIVEN UNTIL CONCRETE HAS REACHED A MINIMUM COMPRESSIVE STRENGTH OF 2000 psi.
5. FASTENERS MUST BE DRIVEN INTO A PRESSURE-TREATED 2x WOOD SILL PLATE AND MUST BE AT LEAST 1-3/4" FROM THE CONCRETE EDGE.
6. P.A.F. SHALL BE INSTALLED AT 32" O.C. EACH PIECE OF PLATE SHALL HAVE A MIN. OF TWO FASTENERS PLACED AT 6" FROM THE ENDS WITH A MIN. SPACING OF 4" BETWEEN P.A.F.

201A SHOT PIN PLACEMENT AT NON-STRUCTURAL WALLS

201 TYPICAL ANCHOR BOLT AND SHOT PIN PLACEMENT

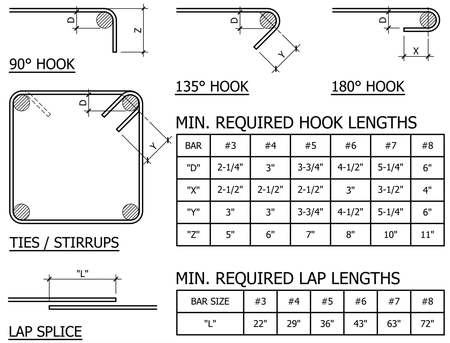

MIN. REQUIRED HOOK LENGTHS

BAR	#3	#4	#5	#6	#7	#8
"D"	2-1/4"	3"	3-3/4"	4-1/2"	5-1/4"	6"
"X"	2-1/2"	2-1/2"	2-1/2"	3"	3-1/2"	4"
"Y"	3"	3"	3-3/4"	4-1/2"	5-1/4"	6"
"Z"	5"	6"	7"	8"	10"	11"

MIN. REQUIRED LAP LENGTHS

BAR SIZE	#3	#4	#5	#6	#7	#8
"L"	22"	29"	36"	43"	63"	72"

202 TYP. REINFORCING HOOKS AND LAPS

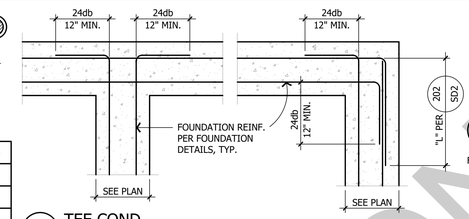

203A TEE COND.

203B CORNER COND.

NOTES:

1. db = BAR DIAMETER
2. PLACE ALL BENDS HORIZONTALLY.
3. FOR SINGLE CURTAIN STEEL PROVIDE SIMILAR BENDS AT 3" CLEAR FROM FAR FACE OF FOOTING, U.N.O.

203 STD REINF. HOOKS - DOUBLE ROW

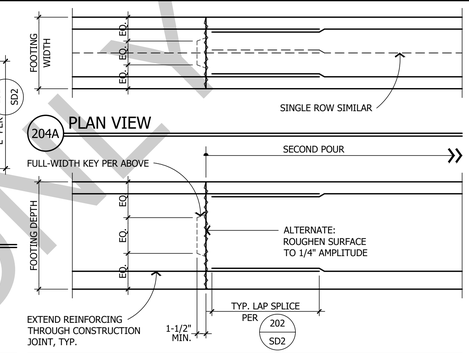

204 FOOTING CONSTRUCTION JOINT

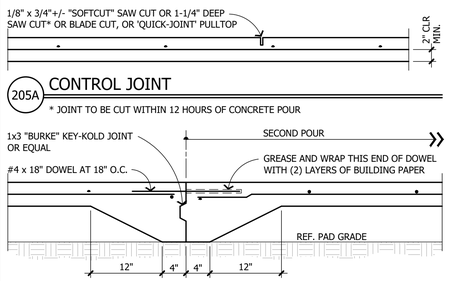

205A CONTROL JOINT

* JOINT TO BE CUT WITHIN 12 HOURS OF CONCRETE POUR

205B CONSTRUCTION JOINT

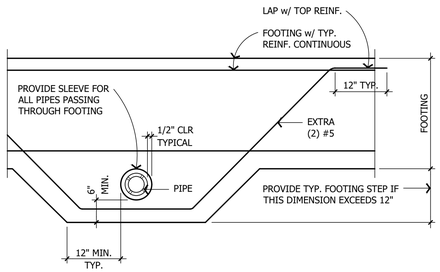

206A PIPE BELOW FOOTING

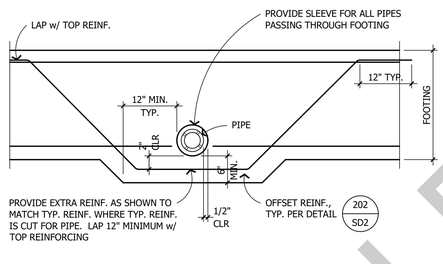

206B PIPE THROUGH FOOTING

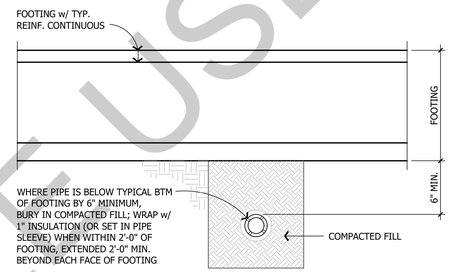

206C PIPE BELOW FOOTING

WHERE FOOTING NEED NOT BE DEEPENED

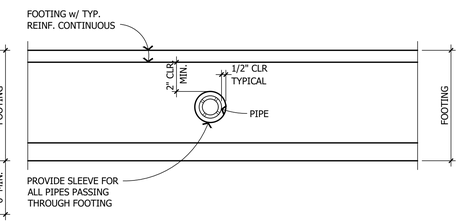

206D PIPE BETWEEN BARS

205 CRACK CONTROL JOINTS (SLAB-ON-GRADE)

206 PIPE PERPENDICULAR TO FOOTING

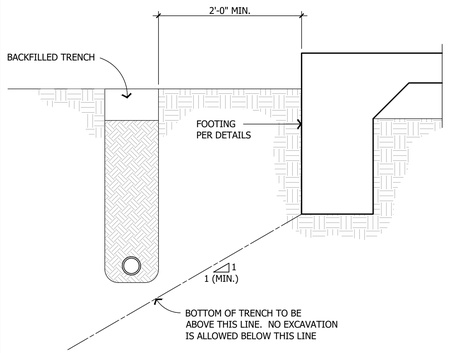

207 PIPE / TRENCH PARALLEL TO FOOTING

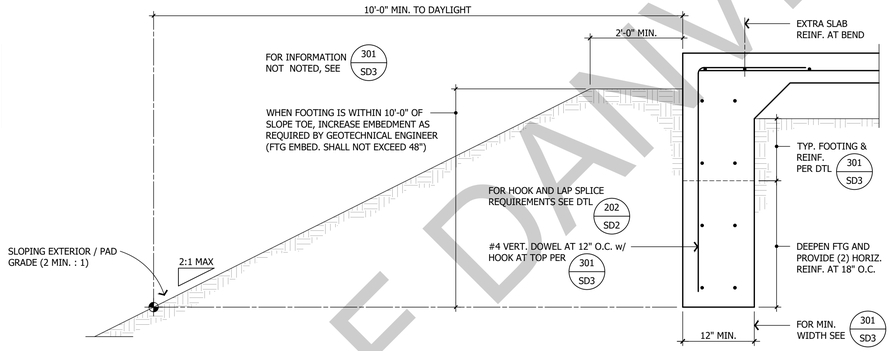

208 INCREASED FOOTING DEPTH BY SLOPE

DRILLED HOLE SCHEDULE

	TOP PLATE SIZE	MAX. HOLE SIZE SIZE WITHOUT TENSION STRAPS	MAX. HOLE * SIZE WITH TENSION STRAPS
EXT. OR INT. BRG WALL OR SHEARWALL	2x4	7/8" DIA.	2-1/4" DIA.
	2x6	2-7/8" DIA.	4-1/4" DIA.
INT. NON-STRUCTURAL PARTITION	2x4	2-1/8" DIA.	2-1/4" DIA.
	2x6	4-1/8" DIA.	4-1/4" DIA.

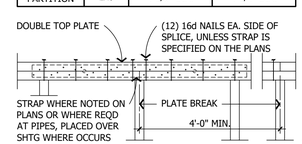

209A TYPICAL LAP SPLICE

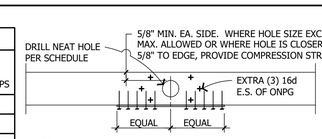

209D TENSION STRAP - PLAN VIEW

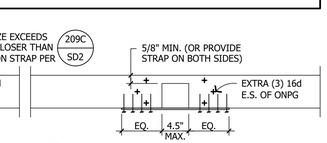

209E COMPRESSION STRAP - PLAN VIEW

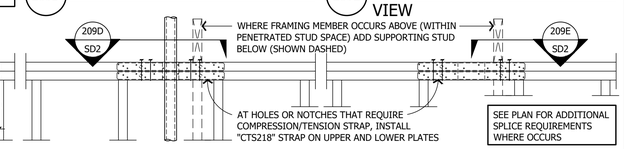

209B TENSION STRAP AT DRILLED HOLES

209C COMPRESSION STRAP AT NOTCHES

209 TOP PLATE SPLICES, BREAKS AND PENETRATIONS

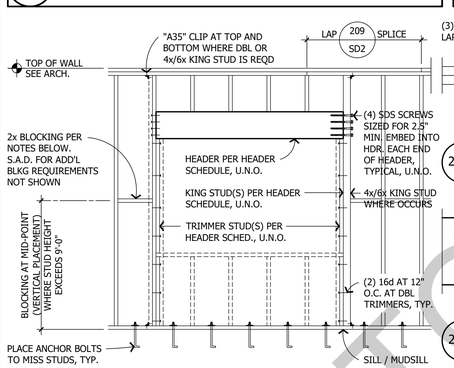

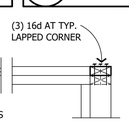

210A TOP PLATE CORNER LAP

SILL ANCHORS AND P.T. D.F. MUDSILLS

1. PLATES AND MUDSILLS SHALL BE BOLTED TO THE FOUNDATION WITH NOT LESS THAN 5/8" DIA. ANCHORS PER DTL. 201 SD2
2. ALL PLATES AND MUDSILLS IN CONTACT WITH CONCRETE OR MASONRY SHALL BE PRESSURE-TREATED PER NOTE 3 OF GENERAL FRAMING NOTES LOCATED ON SHEET SN2
3. PLAIN CARBON STEEL FASTENERS, INCLUDING NUTS AND WASHERS, IN CONTACT WITH SODIUM BORATE SBX/DOT PRESERVATIVE-TREATED WOOD IN AN INTERIOR, DRY ENVIRONMENT SHALL BE PERMITTED.

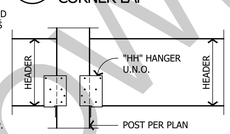

210B HEADER AT POST ELEVATION

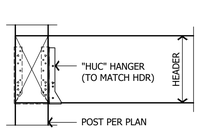

210C HEADER AT CORNER POST - ELEVATION

HEADER SCHEDULE - TYP. U.N.O. ON PLAN

MAX. ROUGH OPENING		3'-6"	4'-6"	5'-6"	6'-6"	8'-6"
BEARING (ROOF)	2x4 WALL	4x6 D.F. #2	4x8 D.F. #2	4x10 D.F. #2	4x10 D.F. #2	3.5 x 9.5 LVL
	2x6 WALL	6x6 D.F. #1	6x6 D.F. #1	6x8 D.F. #1	6x8 D.F. #1	6x10 D.F. #1
BEARING (FLOOR)	2x4 WALL	4x8 D.F. #2	4x10 D.F. #2	4x10 D.F. #2	3.5 x 9.5 LVL	3.5 x 9.5 LVL
	2x6 WALL	6x6 D.F. #1	6x8 D.F. #1	6x10 D.F. #1	6x10 D.F. #1	5.25 x 9.5 LVL
NON- BRG WALLS	2x4 WALL	4x4 D.F. #2	4x4 D.F. #2	4x4 D.F. #2	4x6 D.F. #2	4x8 D.F. #2
	2x6 WALL	4x6 (FLAT)	4x6 (FLAT)	4x6 (FLAT)	6x6 D.F. #1	6x6 D.F. #1

KING STUD SCHEDULE - TYP. U.N.O. ON PLAN

MAX. ROUGH OPENING			3'-6"	4'-6"	5'-6"	6'-6" [1]	8'-6" [1]
MAX. PLATE HEIGHT	8'-1"	2x4 WALL	(1) - 2x4	(2) - 2x4	(2) - 2x4	(2) - 2x4	(3) - 2x4
		2x6 WALL	(1) - 2x6	(2) - 2x6	(2) - 2x6	(2) - 2x6	(3) - 2x6
	9'-1"	2x4 WALL	(2) - 2x4	(2) - 2x4	(2) - 2x4	(3) - 2x4	(3) - 2x4
		2x6 WALL	(1) - 2x6	(2) - 2x6	(2) - 2x6	(2) - 2x6	(3) - 2x6
	10'-1"	2x4 WALL	(2) - 2x4	(2) - 2x4	(3) - 2x4	(4) - 2x4	(5) - 2x4
		2x6 WALL	(1) - 2x6	(2) - 2x6	(2) - 2x6	(2) - 2x6	(3) - 2x6

210D HEADER SCHEDULE - TYPICAL U.N.O. ON THE PLAN

NOTES

1. ALL ROUGH OPENINGS 6'-0" AND GREATER SHALL HAVE DOUBLE 2x TRIM STUDS PER SCHEDULE U.N.O. ON PLAN.
2. TRIM STUDS SHALL BE CONTINUOUS FROM BOTTOM OF HEADER TO THE TOP OF THE SILL PLATE BELOW.
3. STACK ALL KING AND TRIM STUDS FROM LEVEL AT WHICH THEY OCCUR CONTINUOUS DOWN TO SILL PLATE AT FOUNDATION LEVEL. PROVIDE SOLID FILLER IN JOIST SPACE.
4. USE 1-3/4" LSL FILLER OF MATCHING DEPTH TO SHIM TO WALL WIDTH.
5. ADD INSULATION TO HEADERS WHICH DO NOT MATCH WALL THICKNESS PER 210D SD2

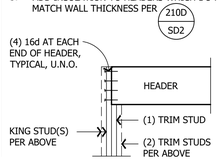

210E TRIM / KING STUDS

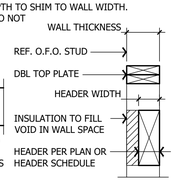

210F INSULATION AT HEADER

210 TYPICAL FRAMED WALL OPENING AND HEADER SCHEDULE

TOWN OF DANVILLE USE ONLY

ADVANCED ENGINEERING
3361 Walnut Blvd. Ste. 100
Brentwood, CA 94513
Office: 925.516.3502
Fax: 925.262.4662

THE DRAWINGS AND SPECIFICATIONS APPEARING HEREIN CONSTITUTE THE ORIGINAL WORK OF **DP ADVANCED ENGINEERING, INC.** AND SHALL BE CONSIDERED CONFIDENTIAL AND PROPRIETARY PROPERTY. COPYING OR REPRODUCING ANY PORTION OF THESE DOCUMENTS WITHOUT WRITTEN AUTHORIZATION IS STRICTLY PROHIBITED. THE CONTRACT DOCUMENTS WERE PREPARED FOR USE ON THIS SPECIFIC SITE IN CONJUNCTION WITH ITS ISSUE DATE AND ARE NOT SUITABLE FOR USE ON A DIFFERENT SITE OR AT A LATER TIME. USE OF THESE DRAWINGS FOR REFERENCE OR EXAMPLE ON ANOTHER PROJECT REQUIRES THE SERVICES OF A PROPERLY LICENSED ENGINEER. REPRODUCTION OF THE CONTRACT DOCUMENTS FOR REUSE ON ANOTHER PROJECT IS NOT AUTHORIZED.

TOWN OF DANVILLE
ACCESSORY DWELLING UNIT CONTEMPORARY

DANVILLE, CALIFORNIA

1	PLAN CHECK RESPONSES	04-19-23
2		
3		
4		
5		
6		

PLEASE NOTE THE REVISION NUMBER AND DATE ARE FOR STRUCTURAL SHEETS ONLY.

Engineering Seal:

Sheet Description:

TYPICAL CONCRETE AND CARPENTRY DETAILS

No Scale

Initial Issue Date:	March 24, 2023
Drawn By:	E. Bennett
Project Designer:	J. Peek
Project Manager:	J. Peek Ext. 23
Job No.	G010120

Sheet No.

SD2

DO NOT SCALE THESE DRAWINGS

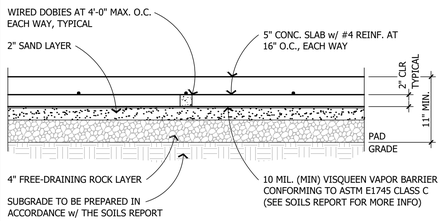

AT GARAGE SLAB COND.:
SAND AND VAPOR BARRIER MAY BE OMITTED IN GARAGE SLABS. CONTRACTOR TO VERIFY WITH LOCAL BUILDING OFFICIAL

A TYPICAL SLAB-ON-GRADE SECTION

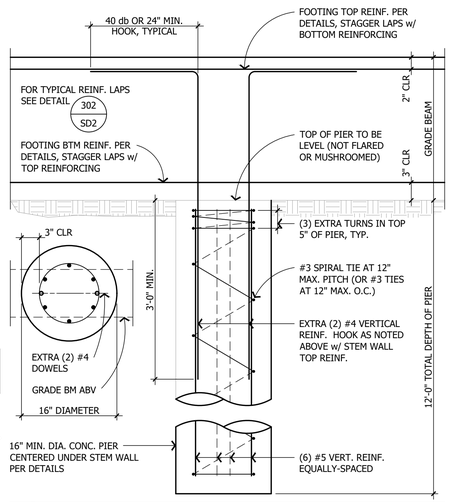

B TYPICAL FOOTING & PIER ELEVATION

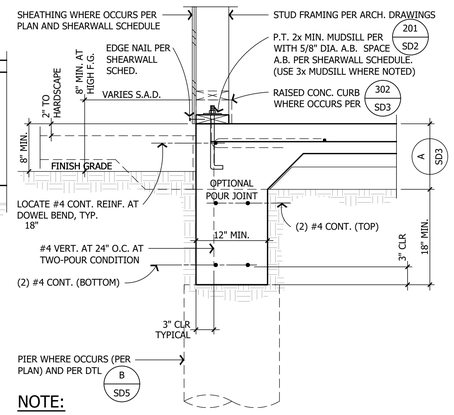

NOTE:
PLAIN CARBON STEEL FASTENERS IN SEA/DOT AND ZINC BORATE PRESERVATIVE-TREATED LUMBER SHALL BE PERMITTED. TYP. ALL DETAILS.

301 TYPICAL PERIMETER FOOTING

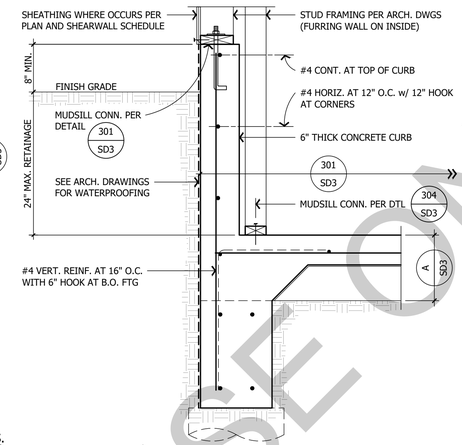

301A RAISED CONC. CURB AT HIGH GRADE COND.

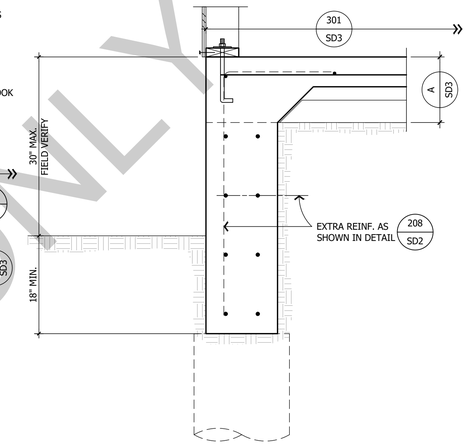

301B DEEPENED FOOTING AT LOW GRADE COND.

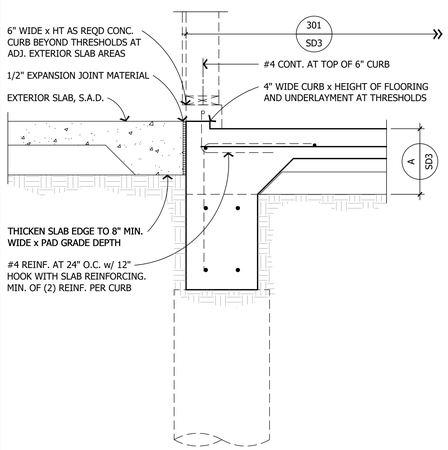

302 EMBEDDED NAILER AT DOORWAY

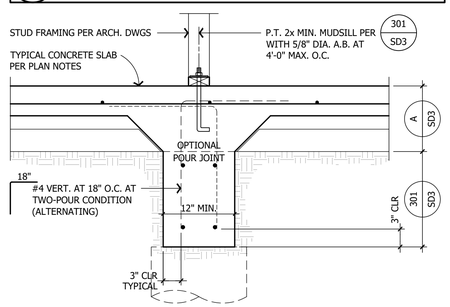

303 TYPICAL INTERIOR FOOTING

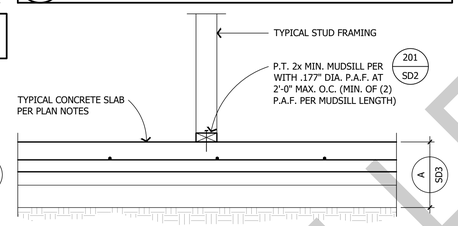

304 NON BRG / NON-SHEARWALL TO SLAB

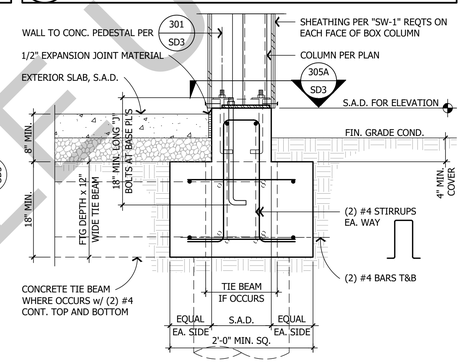

305 PORCH STUD COLUMN AND FOOTING

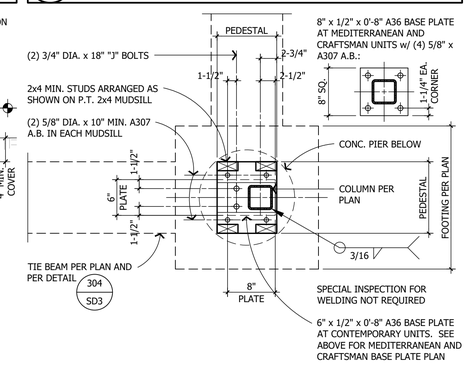

305A COLUMN BASE PLATE AND FOOTING PLAN

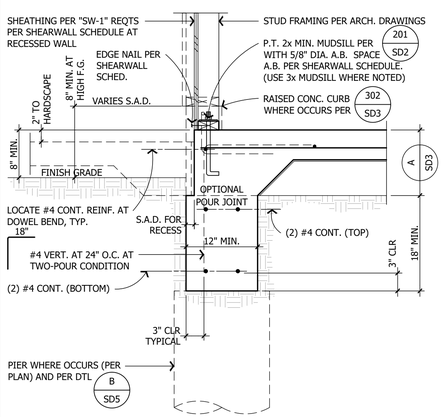

306 RECESSED WALL AND SLAB AT PERIM. FTG

TOWN OF DANVILLE USE ONLY

ADVANCED ENGINEERING
3361 Walnut Blvd. Ste. 100
Brentwood, CA 94513
Office: 925.516.3502
Fax: 925.262.4662

THE DRAWINGS AND SPECIFICATIONS APPEARING HEREIN CONSTITUTE THE ORIGINAL WORK OF **DP ADVANCED ENGINEERING, INC.** AND SHALL BE CONSIDERED CONFIDENTIAL AND PROPRIETARY PROPERTY. COPYING OR REPRODUCING ANY PORTION OF THESE DOCUMENTS WITHOUT WRITTEN AUTHORIZATION IS STRICTLY PROHIBITED. THE CONTRACT DOCUMENTS WERE PREPARED FOR USE ON THIS SPECIFIC SITE IN CONJUNCTION WITH ITS ISSUE DATE AND ARE NOT SUITABLE FOR USE ON A DIFFERENT SITE OR AT A LATER TIME. USE OF THESE DRAWINGS FOR REFERENCE OR EXAMPLE ON ANOTHER PROJECT REQUIRES THE SERVICES OF A PROPERLY LICENSED ENGINEER. REPRODUCTION OF THE CONTRACT DOCUMENTS FOR REUSE ON ANOTHER PROJECT IS NOT AUTHORIZED.

TOWN OF DANVILLE
ACCESSORY DWELLING UNIT CONTEMPORARY
DANVILLE, CALIFORNIA

1	PLAN CHECK RESPONSES	04-19-23
2		
3		
4		
5		
6		

PLEASE NOTE THE REVISION NUMBER AND DATE ARE FOR STRUCTURAL SHEETS ONLY.

Engineering Seal:

REGISTERED PROFESSIONAL ENGINEER
Justen J. Peek
C-51951
Exp. 12/31/2024
CIVIL
State of California

Sheet Description:
FOUNDATION DETAILS
SLAB ON GRADE w/ PIERS

Scale: 1" = 1'-0"

Initial Issue Date:	March 24, 2023
Drawn By:	E. Bennett
Project Designer:	J. Peek
Project Manager:	J. Peek Ext. 23
Job No.	G010120
Sheet No.	SD3

DO NOT SCALE THESE DRAWINGS

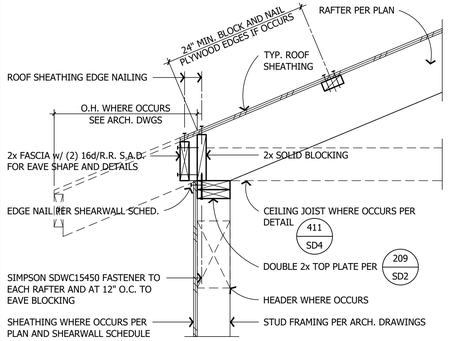

401 RAFTER PERPEND. TO EXTERIOR WALL

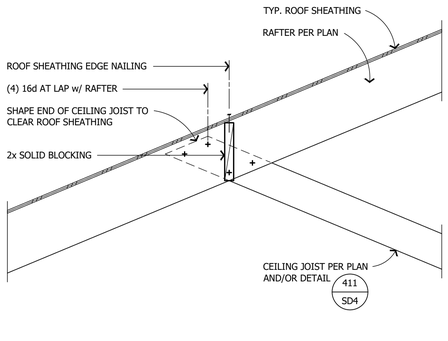

402 CEILING JOIST LAP WITH RAFTER

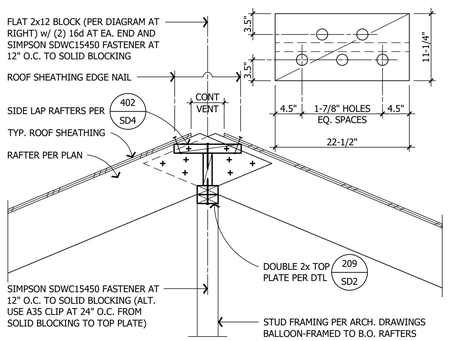

403 RAFTERS AT RIDGE

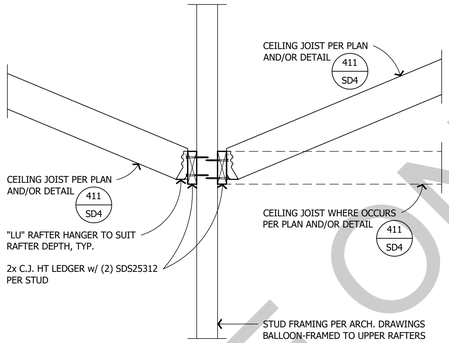

404 CLG JOISTS AT BALLOON-FRAMED WALL

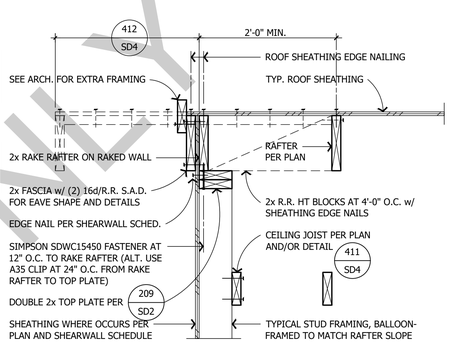

405 RAFTER PARALLEL TO EXTERIOR WALL

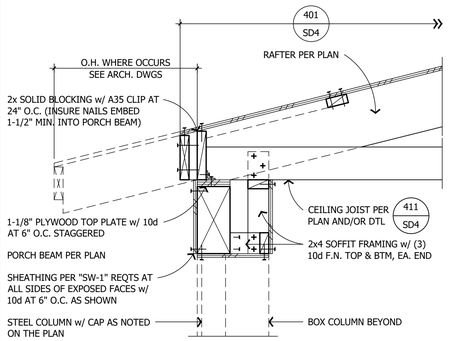

406 PORCH RAFTER PERPEND. TO PORCH BEAM

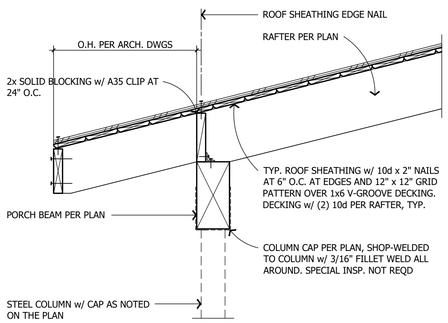

406A PORCH RAFTER - MEDITERRANEAN UNIT

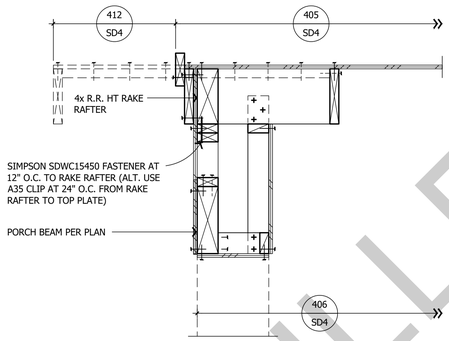

407 PORCH RAFTER PARALLEL TO PORCH BEAM

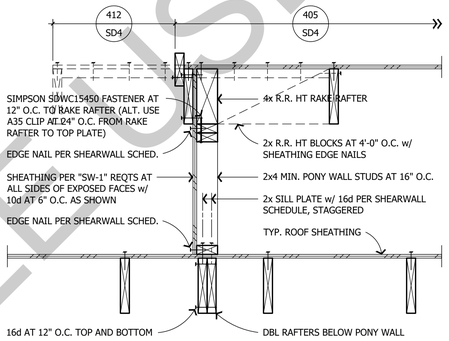

408 ROOF STEP WITH PONYWALL BELOW

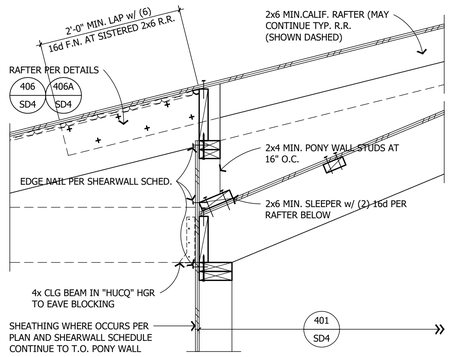

409 RAFTER PERPEND. TO PONYWALL BELOW

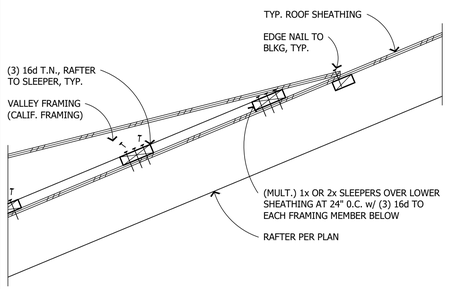

410 CALIFORNIA VALLEY

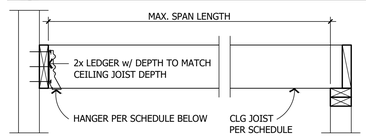

411A AT LEDGER

411B AT WALL

SPAN (MAX.)	CEILING JOIST (MIN.)	LEDGER TO STUD	HANGER
8'-0"	2x4 AT 2'-0" O.C.	(2) 16d	"LU24"
12'-0"	2x6 AT 2'-0" O.C.	(3) 16d	"LUS26"
15'-0"	2x8 AT 2'-0" O.C. (NOTE 1.)	(4) 16d	"LUS26"
18'-0"	2x10 AT 2'-0" O.C. (NOTE 1.)	(4) 16d	"LUS28"
20'-0"	2x12 AT 2'-0" O.C. (NOTE 1.)	(4) 16d	"LU210"

1. PROVIDE 2x FULL-DEPTH SOLID BLOCK, TYPICAL, AT MID-LENGTH OF JOISTS OVER 12'-0" LONG

411 CEILING JOIST SCHEDULE

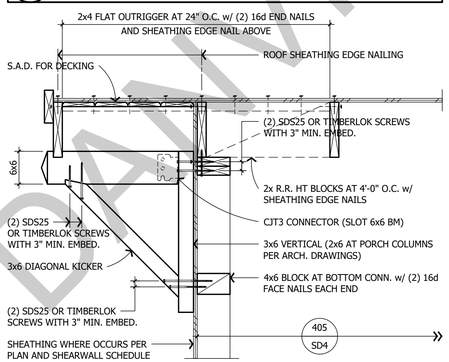

412 BRACKET TO EXTERIOR WALL

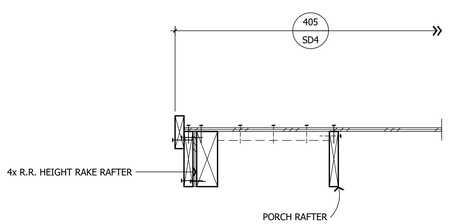

413 PORCH RAFTER PARALLEL TO PORCH BEAM

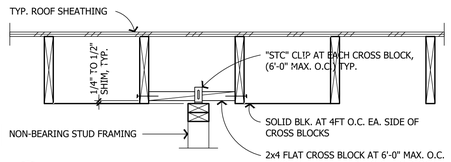

414A WALL PARALLEL TO RAFTER

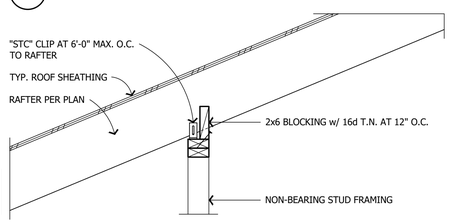

414B WALL PERPENDICULAR TO RAFTER

414 INTERIOR NON-BRG WALL TO RAFTER

TOWN OF DANVILLE
FOR REVIEW ONLY

DO NOT SCALE THESE DRAWINGS

ADVANCED ENGINEERING
3361 Walnut Blvd. Ste. 100
Brentwood, CA 94513
Office: 925.516.3502
Fax: 925.262.4662

THE DRAWINGS AND SPECIFICATIONS APPEARING HEREIN CONSTITUTE THE ORIGINAL WORK OF **DP ADVANCED ENGINEERING, INC.** AND SHALL BE CONSIDERED CONFIDENTIAL AND PROPRIETARY PROPERTY. COPYING OR REPRODUCING ANY PORTION OF THESE DOCUMENTS WITHOUT WRITTEN AUTHORIZATION IS STRICTLY PROHIBITED. THE CONTRACT DOCUMENTS WERE PREPARED FOR USE ON THIS SPECIFIC SITE IN CONJUNCTION WITH ITS ISSUE DATE AND ARE NOT SUITABLE FOR USE ON A DIFFERENT SITE OR AT A LATER TIME. USE OF THESE DRAWINGS FOR REFERENCE OR EXAMPLE ON ANOTHER PROJECT REQUIRES THE SERVICES OF A PROPERLY LICENSED ENGINEER. REPRODUCTION OF THE CONTRACT DOCUMENTS FOR REUSE ON ANOTHER PROJECT IS NOT AUTHORIZED.

TOWN OF DANVILLE
ACCESSORY DWELLING UNIT CONTEMPORARY

DANVILLE, CALIFORNIA

1	PLAN CHECK RESPONSES	04-19-23
2		
3		
4		
5		
6		

PLEASE NOTE THE REVISION NUMBER AND DATE ARE FOR STRUCTURAL SHEETS ONLY.

Engineering Seal:

Sheet Description:
ROOF FRAMING DETAILS

Scale: 1" = 1'-0"

Initial Issue Date:	March 24, 2023
Drawn By:	E. Bennett
Project Designer:	J. Peek
Project Manager:	J. Peek Ext. 23
Job No.	G010120
Sheet No.	SD4